Tuscaloosa County
Subdivision Regulations

TUSCALOOSA COUNTY COMMISSION

W. Hardy McCollum, Probate Judge
Stan Acker
Jerry Tingle
Bobby Miller
Reginald Murray

Adopted May 12, 1999
Amended August 25, 1999
Amended March 13, 2013

Tuscaloosa County
Public Works Department

2810 35th Street
Tuscaloosa, Alabama 35401
(205) 345-6600

TABLE OF CONTENTS

Article I: Purpose, Policy, and Title **4**
Section 1-1: Purpose 4
Section 1-2: Policy 4
Section 1-3: Title 5
Section 1-4: Fees 5
Section 1-5: Effective Date 5

Article II: Authority, Jurisdiction, and Amendments **6**
Section 2-1: Authority 6
Section 2-2: Jurisdiction 6
Section 2-3: Enforcement, Violations and Penalties 6
Section 2-4: Amendments 7
Section 2-5: Board of Developers 7

Article III: Definitions **8**
Section 3-1: Usage 8
Section 3-2: Definition of Terms 8
Section 3-3: Exclusions 15

Article IV: Approval of Subdivision Plats **16**
Section 4-1: Approval of Subdivision Plats Required 16
Section 4-2: Mandatory Pre-Design Conference 16
Section 4-3: Submission of Preliminary Plat 17
Section 4-4: Review by County Engineer 18
Section 4-5: County Commission Approval of Preliminary Plat 18
Section 4-6: Permit to Develop a Minor Subdivision 19
Section 4-7: Approval of Construction Plans for Major Subdivisions 19
Section 4-8: Construction and Inspections for Major Subdivisions 19
Section 4-9: Final Plat Procedures and Approval 20

Article V: Development Standards **23**
Section 5-1: Minimum Requirements 23
Section 5-2: General Requirements 23
Section 5-3: Road or Street Plan 24
Section 5-4: Design Standards 27

Article VI: Guarantee of Completion of Improvements **37**
Section 6-1: Installation of Required Improvement 37
Section 6-2: Required Documentation for Final Plat 37
Section 6-3: Maintenance of Improvement 38

Article VII: Waivers.....39
Section 7-1: General.....39
Section 7-2: Conditions.....40

Article VIII: Conflict with Public and Private Provisions.....41
Section 8-1: Public Provisions.....41
Section 8-2: Private Provisions.....41
Section 8-3: Encumbrances.....41

Article IX: Legal Provisions.....42
Section 9-1: Severability.....42
Section 9-2: Savings Provision.....42
Section 9-3: Incorporation by Reference.....42
Section 9-4: Amendment Procedure for Commission.....42

APPENDIX

I: Pre-Design Conference Request and Attendance Form.....43
II: Preliminary Plat Application.....45
III: Resolution for the Acceptance of a Preliminary Plat.....48
IV: Permit to Develop a Subdivision.....50
V: Flow Chart.....52
VI: Final Plat Checklist-Major Subdivision.....54
VII: Final Plat Checklist-Minor Subdivision.....57
VIII: Maintenance Bond.....60
IX: Resolution Accepting Streets in Subdivisions for County Maintenance.....62
X: Applicable State Laws.....64
XI: May 4, 2005 Resolution Amending 1999 Tuscaloosa County Subdivision Regulation regarding Sanitary Sewer in County Right-of-way.....69
XII: November 17, 2010 Resolution Amending 1999 Tuscaloosa County Subdivision Regulation regarding bonding requirements to guarantee the completion of subdivision improvements.....73
XIII: Typical Sections and Standard Details.....75

XIV: Family Subdivision Form.....81

XI: May 4, 2005 Resolution Approving Revisions to the Tuscaloosa County Subdivision Regulation.....83

ARTICLE I

PURPOSE, POLICY AND TITLE

1-1 PURPOSE
1-2 POLICY
1-3 TITLE
1-4 FEES
1-5 EFFECTIVE DATE

SECTION 1-1 PURPOSE

The subdivision regulations set out herein have been adopted pursuant to authority granted by Code of Alabama 1975, § 11-24-1(b), as amended to establish procedures and standards for the design and development of proposed subdivisions or additions to existing subdivisions within the subdivision jurisdiction of Tuscaloosa County, Alabama, as defined by Article II, Section 2-2 of these subdivision regulations. These regulations shall include, at minimum, the minimum lot size as approved by the Tuscaloosa County Department of Public Health, planning and construction of all public streets and roads, drainage structures, and proper placement of public utilities to be located in the subdivision. **These regulations require that the subdivisions have all infrastructure complete, including, but not limited to, all drainage structures, sidewalks, signs, and final wearing layer. A maintenance bond must be in place prior to the signing of the final plat.** The final plat must be recorded in the office of the Probate Judge prior to the actual sale, offering for sale, transfer, or lease of any lots. Additionally, unless waived by the Tuscaloosa County Commission, these regulations shall also apply to the County's plat approval for developments within the territorial jurisdiction of a municipal planning commission.

SECTION 1-2 POLICY

a. It is hereby declared to be the policy of Tuscaloosa County to consider the subdivision of land and the subsequent development of the subdivided land as subject to the control and regulation of the Tuscaloosa County Commission pursuant to the authority granted to the County by Code of Alabama 1975 § 11-24-1 et seq. as amended.

b. Land to be subdivided shall be of such character that it can be used safely for building purposes with minimal danger to health or peril from flood, or similar menace. Except as exempted by these regulations, no land shall be subdivided until proper provisions have been made for drainage, sewerage disposal, and streets, and approval has been granted in accordance with the procedures prescribed by Code of Alabama 1975 § 11-24-1 et seq. and set out in these regulations.

c. Prior to the actual sale, offering for sale, transfer, or lease of any lots as defined herein for the purpose of creating, establishing, or modifying a subdivision, any owner or developer of land which lies within the area of the County's subdivision jurisdiction shall submit the plat of the proposed subdivision to the Tuscaloosa County Public Works Department for approval in accordance with the procedures as set out in these regulations (by Code of Alabama 1975 § 11-24-1 et seq. as amended, and set out in these regulations).

d. No subdivider shall proceed with the offering for sale of lots, transfer of lots, lease of lots, or erection of buildings, excluding public utility structures, within a subdivision until the subdivision improvements are complete and such a subdivision plat has been granted final plat approval entered in writing on the plat and signed by the Tuscaloosa County Engineer and recorded in the office of the Probate Judge of Tuscaloosa County in accordance with the procedures prescribed by Code of Alabama 1975 § 11-24-1 et seq. as amended, and set out in these regulations.

e. Any violations of the proceedings or regulations described herein may subject the owner or developer to penalties as set out in Article II, Section 2-3 of these regulations and Code of Alabama 1975 § 11-24-3.

SECTION 1-3 TITLE

The regulations shall hereafter be known, cited, and referred to as the Subdivision Regulations of Tuscaloosa County, Alabama.

SECTION 1-4 FEES

Tuscaloosa County has established the following schedule of fees, as authorized under the Code of Alabama 1975 § 11-24-3, to cover the costs associated with review of subdivision developments. The total fee is dependent on the type of subdivision (as defined in Sections 3-2-49 and 3-2-50). The developer is responsible for all charges incurred by the County during the subdivision approval process. **If a preliminary plat is resubmitted, a fee will be charged for each subsequent review**. The fee schedule is as follows:

1. Minor Subdivision Fee: $25.00 plus $10.00 per lot
2. Major Subdivision Fee: $50.00 plus $10.00 per lot

SECTION 1-5 EFFECTIVE DATE

The regulations set out herein shall be in force and applicable to the development of all subdivisions in the subdivision jurisdiction of the Tuscaloosa County Commission from and after the date of adoption by resolution, and as provided in Article IX, Section 9-2. Subdivision regulations previously in place in Tuscaloosa County are hereby repealed and rescinded.

Adopted by resolution this the 12th day of May, 1999

Amended this 13th day of March, 2013

ARTICLE II

AUTHORITY, JURISDICTION, AND AMENDMENTS

2-1 AUTHORITY
2-2 JURISDICTION
2-3 ENFORCEMENT, VIOLATIONS AND PENALTIES
2-4 AMENDMENTS
2-5 BOARD OF DEVELOPERS

SECTION 2-1 AUTHORITY

Pursuant to the powers and jurisdiction granted by Code of Alabama 1975 § 11-24-1, et seq., as amended, the Tuscaloosa County Commission does hereby exercise the power and authority to review, approve, and disapprove plats for all subdivisions within the subdivision jurisdiction of Tuscaloosa County, Alabama. The Tuscaloosa County Commission further does hereby exercise the authority to inspect any subdivision within its subdivision jurisdiction to ensure that there are no violations of its rules and regulations.

SECTION 2-2 JURISDICTION

From and after the effective date set out in Article I, Section 1-5, these regulations shall govern each and every subdivision of land in all areas of Tuscaloosa County from and after the effective date set out in Article I, Section 1-5, these regulations shall govern each and every subdivision of land in all areas of Tuscaloosa County outside of a municipality. When the subdivided land lies within the planning jurisdiction of a municipality and outside the municipal limit, the more stringent regulations of the two shall govern, unless otherwise exempted by these regulations.

SECTION 2-3 ENFORCEMENT, VIOLATIONS, AND PENALTIES

It shall be the duty of each owner and developer of each subdivision, as defined herein, to have all subdivisions completed in conformance with these regulations and the Code of Alabama 1975 § 11-24-1, et seq. as amended.

It shall be the duty of the Tuscaloosa County Public Works Department to enforce the regulations and notify the Tuscaloosa County Commission of any violations or lack of compliance with these regulations.

Pursuant to Code of Alabama 1975, § 11-24-3 et seq., any owner or developer who violates any provision of Code of Alabama 1975, § 11-24-1 et seq., or any of the regulations set out herein shall be subject to a fine of not less than two hundred and fifty dollars ($250) but not to exceed one thousand dollars ($1000) per lot that has been sold, offered for sale, transferred, or leased to the public.

The Tuscaloosa County Commission is authorized to bring civil action in any court of competent jurisdiction to enjoin any action of an owner or developer which is in violation of the provisions of Code of Alabama 1975, § 11-24-1 et seq., or any of the regulations set out herein. In such action,

the Tuscaloosa County Commission shall be entitled to seek an injunction and may recover penalties as set out in these regulations and Code of Alabama 1975, § 11-24-3.

Any owner, agent of the owner, or developer violating any provision of these regulations or any rule or regulation made or propagated by the Tuscaloosa County Commission relating to subdivision regulations or the subdivision of land shall be fined as follows:

- $250.00 for the first lot which has been sold, offered for sale, transferred or leased to the public in violation of said regulations.
- $500.00 for the second lot which has been sold, offered for sale, transferred or leased to the public in violation of said regulations.
- $750.00 for the third lot which has been sold, offered for sale, transferred or leased to the public in violation of said regulations.
- $1000.00 each lot in addition to three which has been sold, offered for sale, transferred or leased to the public in violation of said regulations.

SECTION 2-4 AMENDMENTS

The Tuscaloosa County Commission may adopt amendments to increase the effectiveness of these regulations or expedite the approval of subdivision plats by majority vote of the Tuscaloosa County Commission.

SECTION 2-5 BOARD OF DEVELOPERS

As provided in Code of Alabama 1975, § 11-24-1(c), et seq., as amended, the Tuscaloosa County Commission may establish a Board of Developers, made up of 5 people, who have a background and knowledge in land developing. This board will make suggestions to the Tuscaloosa County Commission regarding the contents of the subdivision regulations, suggest revisions to the subdivision regulations, and assist in resolving disputes between developers and the Commission. If such a board is established, its procedures, policies, and authority shall be added as an amendment to the Subdivision Regulations of Tuscaloosa County, Alabama upon approval of the Tuscaloosa County Commission.

ARTICLE III

DEFINITIONS

3-1 USAGE
3-2 DEFINITION OF TERMS
3-3 EXCLUSIONS

SECTION 3-1 USAGE

For the purpose of these regulations, certain numbers, abbreviations, terms, and words used herein shall be used, interpreted, and defined as set forth in this section. Unless the context clearly indicates to the contrary, words used in the present tense include the future tense; words used in the plural number include the singular; the word herein means "in these regulations;" the word "regulations" means "these regulations."

SECTION 3-2 DEFINITION OF TERMS

3-2-1 ***AASHTO***: American Association of State Highway Transportation Officials.

3-2-2 ***ACCESS:*** A deeded or dedicated portion of property or lot that provides travelway to a public city, county, or state road. All access must have 30 feet minimum width from the city, county, or state road to the property.

3-2-3 ***ADA***: Americans with Disabilities Act.

3-2-4 ***ADT (Average Daily Traffic):*** Total volume of vehicles during a given time period, in whole days, as measured during a non-holiday weekday. The formula for the ADT is greater than one day and less than one year divided by the number of days in that time period.

3-2-5 ***ALLEY:*** A public right-of-way primarily designed to serve as a secondary access to the side or rear of those properties which have principal frontage on another street.

3-2-6 ***APPLICANT:*** The owner of land proposed to be subdivided or a person designated in writing by the legal owner as his or her representative.

3-2-7 ***ARTERIAL:*** A road or street which connects areas that produce a large amount of trip generation. Arterials have a dual function to move traffic and to provide access to land uses, particularly high trip-generating commercial activities.

3-2-8 ***BLOCK:*** A tract of land bounded by roads, streets, or by a combination of streets, public parks, right-of-way, cemeteries, railroad right-of-way, shorelines of waterways, or other boundary lines.

3-2-9 ***BUILDING:*** Any roofed structure, including houses, barns, sheds, shops and garages.

3-2-10 ***BUILDING SETBACK LINE:*** A line parallel to the property line over which no structure may be erected, and which defines the minimum horizontal distance to be provided between a building and the adjacent property line or right-of-way boundary. The minimum interior building setbacks lines shall be defined as the following:

30 feet along and adjacent to the front property line of the lot (abutting the street).
35 feet along and adjacent to the rear property line.
10 feet along and adjacent to both sides of the property line on each side (20 feet total).

3-2-11 ***COLLECTOR STREET:*** A route whose primary function is to collect traffic from an area and move it to the arterial street system while also providing substantial service to abutting land use, and which typically does not have extensive continuity.

3-2-12 ***CONSTRUCTION PLANS:*** Engineered plans detailing the design and requirements for the construction of public or private improvements.

3-2-13 ***CORNER LOT:*** A lot which occupies the interior angle at the intersection of two street lines. The street line forming the least frontage shall be deemed the front of the lot except where the two street lines are equal, in which case the owner shall be required to specify which is the front.

3-2-14 ***COUNTY:*** The County of Tuscaloosa, Alabama.

3-2-15 ***COUNTY COMMISSION:*** The County Commission of Tuscaloosa County, Alabama.

3-2-16 ***COUNTY ENGINEER:*** The duly designated Engineer of Tuscaloosa County, Alabama.

3-2-17 ***COUNTY LAND SURVEYOR:*** The duly designated Land Surveyor of Tuscaloosa County, Alabama.

3-2-18 ***COUNTY ROAD, (existing):*** A public road maintained by the County.

3-2-19 ***COUNTY ROAD, (proposed):*** A road designed to meet the County design standards as set forth in these regulations.

3-2-20 ***COUNTY SPECIFICATIONS:*** All construction specifications which have been adopted by the County Commission or as required by the County Engineer.

3-2-21 ***CUL-DE-SAC:*** A minor street with only one outlet and having an appropriate terminal for the safe and convenient reversal of traffic movement.

3-2-22 ***DAY:*** A calendar day.

3-2-23 ***DEDICATION:*** The transfer of property from private to public ownership.

3-2-24 ***DEVELOPER:*** The owner of land proposed to be subdivided or improved, or a person designated in writing by a legal owner as his or her representative. Written

consent shall be required from the legal owner of the premises.

3-2-25 ***DEVELOPER'S ENGINEER:*** The design professional, who shall be a Land Surveyor and, when required, a Civil Engineer, licensed and in good standing with the State Board of Licensure for Professional Engineers and Land Surveyors of Alabama and permitted to practice in the County, and who is originally responsible for coordinating and certifying as to the completeness and correctness of all information collected by his/her efforts or those of his/her agents and/or subcontractors and submitted for approval on behalf of the developer. In the event that the developer changes his engineer/surveyor, then his/her new engineer/surveyor shall be required to rectify all previous submitted documents and thereby accept all responsibility for the completeness and correctness of the same.

3-2-26 ***DEVELOPMENT:*** Includes, but is not limited to, the design work of lot layout, construction of drainage structures, construction of buildings or public use areas, planning and construction of public streets and public roads, and placement of utilities, and any other applicable construction or improvement required or included in a certain subdivision project.

3-2-27 ***DOUBLE FRONT LOT:*** A lot having frontage on two (2) non-intersecting streets as distinguished from a corner lot.

3-2-28 ***EASEMENT (PUBLIC):*** A grant, by the property owner, of the right of the general public to use certain streets, highways, paths or airspace.

3-2-29 ***EASEMENT (PRIVATE):*** A grant, by the property owner, the right for a corporation or a person to use certain streets, highways, paths, or airspace which the general public cannot use.

3-2-30 ***EXPRESSWAY OR FREEWAY:*** Facilities that accommodate a high volume of traffic through the prohibiting of ingress and egress except at controlled intervals. Freeways involve complete control of access while expressways permit at grade intersections at infrequent intervals. The expressway or freeway has only one function, to carry traffic.

3-2-31 ***FINAL PLAT:*** A plat of a tract of land which meets the requirements of these regulations and is in form for recording in the Office of the Probate Judge of Tuscaloosa County, Alabama.

3-2-32 ***FLOOD, ONE HUNDRED (100) YEAR***: A flood or temporary inundation of normally dry land, which has, on the average, a 1% chance of being equaled or exceeded in any given year.

3-2-33 ***FLOOD, TEN (10) YEAR:*** A flood or temporary inundation of normally dry land which has, on the average, a 10% chance of being equaled or exceeded in any given year.

3-2-34 ***FLOOD, TWENTY-FIVE (25) YEAR:*** A flood or temporary inundation of normally dry land which has, on the average, a 4% chance of being equaled or exceeded in any given year.

3-2-35 ***FLOODWAY:*** The stream channel and the portion of the adjacent floodplain

which must be reserved solely for the passage of flood-waters in order to prevent an increase in upstream flood heights of more than one (1) foot above the pre-development conditions.

3-2-36 ***FLOOD DAMAGE PREVENTION ORDINANCE:*** A set of regulations adopted by the Tuscaloosa County Commission on March 19, 2008 that promote public health safety, and general welfare to minimize public and private losses due to flood conditions in specific areas.

3-2-37 ***FLOOD ZONE DEVELOPMENT PERMIT:*** A Development Permit that is required prior to any development that is located in the 100-year floodplain.

3-2-38 ***HARDSHIP:*** An unusual situation involving an individual piece of property which will not permit the full utilization of the property.

3-2-39 ***HEALTH DEPARTMENT:*** Alabama State Department of Public Health or the Tuscaloosa County Department of Public Health.

3-2-40 ***IMMEDIATE FAMILY MEMBER:*** Includes the owner's spouse, siblings, children, grandchildren, parents, grandparents, or step-related individuals of the same status.

3-2-41 ***IMPROVEMENT, PUBLIC:*** Any drainage ditch, roadway, parkway, sidewalk, pedestrian way, tree, lawn, off-street parking area, lot improvement, or other facility for which the local government may ultimately assume the responsibility for maintenance and operation or which may affect an improvement for which government responsibility is established.

3-2-42 ***IMPROVEMENT, PRIVATE:*** Any drainage ditch, roadway, parkway, sidewalk, pedestrian way, tree, lawn, off-street parking area, lot improvement, or other facility for which private owners assume the responsibility for maintenance and operation.

3-2-43 ***INFRASTRUCTURE:*** Facilities and services needed to sustain development and land-use activities including, but not limited to, roads, water, sewer, electric, gas, communications, storm water drainage, and flood management systems.

3-2-44 ***LICENSED ENGINEER:*** An engineer properly licensed and registered in the State of Alabama.

3-2-45 ***LICENSED LAND SURVEYOR:*** A land surveyor properly licensed and registered in the State of Alabama.

3-2-46 ***LOCAL SERVICE STREET:*** A street that is primarily used to gain access to the property bordering it.

3-2-47 ***LOT:*** A tract, plot, or portion of a subdivision or other parcel of land intended as a unit for the purpose, whether immediate or future, of transfer of ownership, lease, or rental, or for building development.

3-2-48 ***LOT LINE:*** The boundary line of any lot.

3-2-49 ***MAINTENANCE BOND:*** A written agreement between a developer and the County guaranteeing the maintenance of the physical improvements in a

subdivision for a period of fifteen (15) months.

3-2-50 ***MAJOR SUBDIVISION:*** A major subdivision is any existing or proposed division of lands, which has public roadway, drainage, or other improvements.

3-2-51 ***MINOR SUBDIVISION:*** A minor subdivision is any existing or proposed division of lands, which has no roadway, drainage, or other public improvements, excluding driveway pipes.

3-2-52 ***MARGINAL ACCESS:*** A service road, or other treatment, used to provide adequate protection of properties in cases where an arterial runs through, or near, a subdivided area.

3-2-53 ***MINOR COLLECTOR ROAD OR STREET:*** A route used to connect collector roads in a road system, servicing only the residents of that road.

3-2-54 ***MONUMENT:*** A permanent object serving to indicate a limit, or to mark a boundary or point.

3-2-55 ***OWNER:*** Any person, group of persons, firm or firms, corporation or corportations, or any other legal entity having legal title to or sufficient proprietary interest in the land sought to be subdivided under these regulations.

3-2-56 ***OWNER'S ENGINEER:*** The licensed engineer who is the agent of the owner or developer of land which is proposed to be subdivided or which is in the process of being subdivided.

3-2-57 ***PRELIMINARY PLAT:*** A plan for a subdivision of land which is submitted to the Tuscaloosa County Commission for approval to develop the subdivision that is required in Article IV of these subdivision regulations.

3-2-58 ***PERMANENT REFERENCE POINTS:*** As defined by the Standards of Practice set out and required by the Alabama Society of Professional Land Surveyors.

3-2-59 ***PERMIT TO DEVELOP:*** A written authorization issued by the County Engineer which authorizes the developer of the subdivision to proceed with the subdivision based on the preliminary subdivision plat that has been approved.

3-2-60 ***PERSON***: includes a corporation, LLC, LLP, a partnership, or an incorporated association of persons, such as a club.

3-2-61 ***PRIVATE STREET:*** Any street, road, alley, lane, or thoroughfare which affords the principal means of access to abutting property and which has not been formally dedicated to or accepted by the County and is not maintained by the County. Private streets shall meet the minimum standards for public streets and any additional requirements contained herein.

3-2-62 ***PROBATE JUDGE:*** The Judge of Probate of Tuscaloosa County, Alabama.

3-2-63 ***PROPOSED PLAT:*** A preliminary plat.

3-2-64 ***PUBLIC STREET:*** A public right-of-way for vehicular traffic that affords the

principal means of access to abutting properties.

3-2-65 ***RESUBDIVISON:*** A change in a map of an approved or recorded subdivision plat if such change affects any street layout on such map or area reserved thereon for public use, or any lot line, or if it affects any map or plan legally recorded prior to the adoption of any regulations controlling subdivisions.

3-2-66 ***RIGHT-OF-WAY:*** A strip of land occupied or intended to be occupied by a street, off-street pedestrian walkway, railroad, road, electric transmission line, oil or gas pipeline, water main, sanitary or storm sewer main, or for another special use. The usage of the term "Right-of-Way" for land platting purposes shall mean that every right-of-way hereafter established and shown on a final plat is to be separate and distinct from the lots or parcels adjoining such right-of-way and not included within the dimensions or areas of such lots or parcels. Rights-of-way intended for streets, crosswalks, water mains, sanitary sewers, storm drains or any other use involving maintenance by a public agency shall be dedicated to public use by the maker of the plat on which such right-of-way is established.

3-2-67 ***ROAD OR STREET:*** A constructed roadway for vehicular traffic that affords the principal means of access to abutting properties.

CITY ROAD: Public road maintained by the City.

COUNTY ROAD: Public road maintained by the County

a. DEEDED: A road deeded to and accepted by the County.

b. DEDICATED: A road dedicated or deeded to the County for public use and the Tuscaloosa County Commission **ACCEPTS THE ROAD BY RESOLUTION** as a public road.

c. PRESCRIPTIVE: A roadway used by the public as a highway without let or hindrance for a period of 20 years. This is a factual determination taking into consideration things such as use by the public, maintenance by the County, and length of use. A prescriptive road is a County road even though it may not have been constructed or formally accepted by the County.

PUBLIC ROAD: Street or road that has been:

a. Constructed for public use;

b. Established by statutory proceedings; or

c. Dedicated to and accepted by the County for public use.

PRIVATE ROAD: Road not maintained by the City, County, or State, whether or not it has public access.

STATE ROAD: Public road maintained by the State of Alabama.

3-2-68 ***SUBDIVIDER:*** Any person, firm, or corporations who having an interest in land, causes it, directly or indirectly, to be divided into a subdivision, or one who directly or indirectly, sells, leases, or develops, or offers to sell, lease, or develop, or advertises for sale, lease, or development, any interest, lot, parcel, site, unit, or plat in a subdivision, or who is employed by or directly or indirectly controlled by, or under direct, or indirect common control with any of the foregoing.

3-2-69 ***SUBDIVISION:*** The development or the division of a lot, tract, or parcel of land into two or more lots, plats, sites, or other division of land for the purpose of establishing or creating a subdivision through sale, lease, or building development. Development includes, but is not limited to, the design work of a lot layout, the construction of drainage structures, the construction of public use areas, the planning and construction of public roads, and the placement of public utilities. A subdivision does not include the construction or development of roads or buildings on private property to be used for agricultural purposes. The public acquisition of land for the widening or opening of streets or other public purposes shall not be included within this definition or subject to the requirements of these regulations. Exclusions from the subdivision process are defined in Section 3-3.

3-2-70 ***SUBDIVISION JURISDICTION:*** The jurisdiction of the Commission consists of all subdivision of land in all areas of Tuscaloosa County outside the jurisdiction of a municipal planning commission.

3-2-71 ***SURETY:*** A maintenance bond in the form of a commercial bond, irrevocable letter of credit, or cashier check, guaranteeing the completion of the physical improvements according to the plans and specifications within a fifteen (15) month time frame.

3-2-72 ***TEMPORARY CUL-DE-SAC:*** A dead end street which widens sufficiently at the end to permit a vehicle to make a "U" turn. The end of the street is to be constructed to allow traffic to turn around until the road is extended for future development. All temporary cul-de-sacs meet all requirements of 5-4.

3-2-73 ***TERRITORIAL JURISDICTION OF MUNICIPAL PLANNING COMMISSION:*** All land located in a municipality and all land lying within the jurisdiction of a municipal planning jurisdiction outside the municipal limits as enforced by the municipality.

3-2-74 ***WAVIER*** A request to depart from the literal requirements of these subdivision regulations by virtue of a unique hardship due to special circumstances regarding the property to be developed.

3-2-75 ***WATERCOURSE:*** Any depression serving to give direction to a flow of water, having a bed and defined banks. The definition shall also include other generally or specifically designated areas where flooding may occur. The flow of water need not be on a continuous basis, but may be intermittent resulting from the surface runoff of precipitation.

3-2-76 ***WIDTH OF LOT:*** The mean horizontal distance between the two side lot lines.

SECTION 3-3 EXCLUSIONS FROM THE SUBDIVISION PROCESS

The following shall not be considered a subdivision and shall be excluded from the subdivision process:

I. The parceling off or sale of tracts measuring 10 acres or more with a minimum of 30 feet access to a publicly maintained road.

II. The parceling off for sale of plots in a cemetery intended for burial of the dead.

III. The portioning of a tract of land among heirs or claimants through a sale of division, when ordered by a court of competent jurisdiction for a purpose other than to avoid application of these regulations.

IV. The noncommercial conveyance by a property owner of one or more lots or tracts of land to an immediate family member or a direct lineal descendant, and not for the intent of resale or other development. A Family Subdivision Form must be filled out and filed along with each deed and recorded in the Office of the Probate Judge in the event of this exclusion. If at any time in the future this property is sold to any person outside the immediate family, all applicable subdivision regulations imposed by the Tuscaloosa County Commission will have to be met.

V. The conveyance of a portion of one property owner's previously unplatted land to an owner of directly abutting unplatted land, provided that no such conveyance shall reduce a parcel of land below the minimum area as required by any agency with jurisdiction over that piece of property. Furthermore, the deed conveying said property must recite that the land conveyed is to form a homogenous part of the grantee's property, is not a separate building lot, and shall not be conveyed to a third party as a separate property unless and until it has been subdivided in accordance with the subdivision regulations.

VI. The conveyance of a tract of land of any size to a public utility, provided that the deed shall recite that the said tract shall be used solely as the site for a pumping station, transformer substation, switching facility, valve and/or metering facility or other similar public utility service facility.

VII. The ownership of lots created for the purpose of a mortgage and which has a minimum 30 feet of access to a public road or a 30 feet easement as required by these regulations that shall not change ownership, all applicable subdivision regulations imposed by the Tuscaloosa County Commission will have to be met.

ARTICLE IV

APPROVAL OF SUBDIVISION PLATS

4-1 APPROVAL OF SUBDIVISIONS REQUIRED
4-2 MANDATORY PRE-DESIGN CONFERENCE
4-3 SUBMISSION OF PRELIMINARY PLAT
4-4 REVIEW BY COUNTY ENGINEER
4-5 COUNTY COMMISSION APPROVAL OF PRELIMINARY PLAT
4-6 PERMIT TO DEVELOP MINOR SUBDIVISONS
4-7 APPROVAL OF CONSTRUCTION PLANS FOR MAJOR SUBDIVISIONS
4-8 CONSTRUCTION AND INSPECTIONS FOR MAJOR SUBDIVISIONS
4-9 FINAL PLAT PROCEDURES AND APPROVAL

SECTION 4-1 APPROVAL OF SUBDIVISIONS PLATS REQUIRED

From and after May 12, 1999, no subdivision plat of land within the subdivision jurisdiction as defined in Article III of these regulations, shall be constructed, built, filed, or recorded, nor shall any lots be sold, offered for sale, transferred, or leased until the plat has been submitted to The Tuscaloosa County Public Works Department and approved by the Tuscaloosa County Commission. The Probate Judge, upon receipt of copy of these regulations and the Commission's resolution, shall not thereafter file or record a plat of subdivision of land located within the County's subdivision jurisdiction, as defined herein, without the approval of such plat in accordance with these regulations. No street or road shall be accepted and maintained by the County unless and until the requirements set forth in these regulations have been complied with and the subdivision has been approved by the appropriate parties.

It is the responsibility of the developer to apply for subdivision approval unless the development meets one of the exclusions to these regulations as specified in Section 3-3. The developer shall be responsible for the construction, maintenance, and repair of all such improvements until the subdivision is accepted by the County pursuant to the laws of this state.

SECTION 4-2 MANDATORY PRE-DESIGN CONFERENCE

Whenever the subdivision of a tract of land is proposed within the jurisdiction of these regulations, the subdivider is required to consult early and provide documentation to the Tuscaloosa County Public Works Department.

The developer shall request a Pre-Design Conference by submitting a completed request form to the Tuscaloosa County Public Works Department. The developer, the developer's design professional, and public works staff shall be invited as appropriate. The request form can be located in Appendix I of these regulations. The form may be submitted via mail, email, or fax to the Tuscaloosa County Public Works Department. Based on the outcome of the conference the developer will be directed to seek approval of either a Minor Subdivision or Major Subdivision as defined in Sections 3-2-49 and 3-2-50.

SECTION 4-3 SUBMISSION OF PRELIMINARY PLAT

Following the Pre-Design Conference the developer shall submit the Preliminary Plat Application materials to The Tuscaloosa County Public Works Department. The Preliminary Plat Application packet shall include each of the following:

(1) A letter stating that the preliminary plat is being submitted for review. This letter shall state the developer's intent as to the final ownership of any new roads included on the plat, if applicable;

(2) Preliminary Plat Application (See Appendix II);

(3) A minimum of 4 copies of the preliminary plat in accordance with the requirements listed in this section;

(4) A letter from the Tuscaloosa County Health Department detailing field review by the Tuscaloosa County Health Department for the general lot layout has been completed;

(5) Any variance request accompanied by supporting documentation;

(6) The names and addresses of each adjoining landowner and utility entitled to notice.

(7) All construction plans, certified by a professional engineer.

4-3-1 PRELIMINARY PLAT REQUIREMENTS

The Preliminary Plat shall be prepared by a licensed land surveyor and shall be clearly and legibly drawn at a convenient scale of not less than one inch equals one hundred feet, and the sheets shall be numbered in sequence if more than one sheet is required. The sheet size shall not exceed 24"x36".The preliminary plat shall include the following:

(1) Names and addresses of owners of record;

(2) Proposed name of subdivision, date, north arrow, and scale;

(3) Name and seal of licensed land surveyor;

(4) Vicinity map showing location of the subdivision;

(5) Exact boundaries of the tract of land being subdivided, shown with bearings or angles, and distances; use state data for the basis of bearings, minimum building setback lines;

(6) Names and addresses of the owners of land immediately adjoining the tract of land being subdivided, as they appear on the current tax maps in the Tuscaloosa County Tax Assessor's office;

(7) Names and addresses of all utilities that provide service to the proposed subdivision; give reference to whether the utility is public or private;

(8) Areas of concern, such as rocky outcrops, areas prone to flooding and other conditions affecting the site shall be shown;

(9) The location of existing streets, buildings, water courses, railroads, transmission line drainage structures, public utilities, jurisdiction lines, and any public utility easements on and adjacent to the tract being subdivided;

(10) Proposed rights-of-way or easements including locations, widths, purposes, and street names;

(11) Proposed lot lines with angles bearings and distances with lot and block numbers;

(12) Proposed minimum building setback lines;

(13) Proposed parks, school sites, or other public or private open space;

(14) Site data shall include acreage in total tract, all lot sizes, and total number of lots;

(15) Legend;

(16) Name and seal of the engineer of record, if applicable;

(17) Any area within or adjacent to the proposed subdivision subject to inundation by the 100 year flood projections as defined by the Tuscaloosa County Flood Damage Prevention Ordinance.

SECTION 4-4 REVIEW BY COUNTY ENGINEER

The County Engineer shall have 30 days to review the submitted preliminary plat application packet and ensure its compliance with these regulations. In the event the submitted packet does not meet these regulations, the County Engineer shall notify the developer of the deficiencies. No further action will be taken by the County Engineer until the developer corrects the deficiencies and resubmits the corrections for approval.

If upon completion of the review the County Engineer determines that the preliminary plat application packet complies with these regulations, the developer will be notified in writing to that effect. The County Engineer shall also send proper notice of the recommendations for approval to each adjoining landowner and affected utilities submitted by the developer.

SECTION 4-5 COUNTY COMMISSION APROVAL OF PRELIMINARY PLAT

Once the County Engineer verifies that the application packet meets the regulations, the preliminary plat shall be placed on the agenda for the next regularly scheduled County Commission meeting for approval. Pursuant to Code of Alabama 1975, § 11-24-1(b), the County Commission shall approve the plat in the event the County Engineer has determined that the preliminary plat meets these regulations.

SECTION 4-6 PERMIT TO DEVELOP A MINOR SUBDIVISION

Following the approval of the preliminary plat for a minor subdivision, the County Engineer shall issue a Permit to Develop based on the approved plat. Any changes to the proposed layout will be subject to resubmitting the Preliminary Plat to the Tuscaloosa County Public Works Department prior to the Final Plat being accepted. The Final Plat meeting the requirements set forth in Section 4-9-1 shall be submitted at this time. Once the Final Plat has been signed and recorded, the developer may proceed with the actual sale, transfer, or lease of lots. No building development shall take place until the Final Plat has been recorded in the office of Probate Judge.

SECTION 4-7 APPROVAL OF CONSTRUCTION PLANS FOR MAJOR SUBDIVISIONS

Following the approval of the preliminary plat for a major subdivision, the developer shall be required to submit 2 sets of construction plans for the proposed subdivision to the Tuscaloosa County Public Works Department. The plans shall be prepared in accordance with requirements set forth in Section 5 of these regulations. The County Engineer shall have 30 days to review the construction plans to ensure compliance with these regulations. In the event the submitted plans do not meet these regulations, the County Engineer shall notify the developer of the deficiencies. Upon approval of the construction plans by the County Engineer and the County Commission, a Permit to Develop shall be issued to the developer.

The developer shall have one year from the date of issuance of the Permit to develop to begin substantial work on the proposed subdivision. If construction does not begin within the one year time frame, the preliminary plat must be resubmitted for review by the County Engineer and approval of the County Commission.

Any changes or deviations from the approved preliminary plat and construction plans shall be in violation of these regulations and shall be subject to removal or correction at the expense of the developer. Changes to the subdivision construction plans will be submitted for review and approval by the County Engineer and the County Commission.

SECTION 4-8 CONSTRUCTION AND INSPECTIONS FOR MAJOR SUBDIVISIONS

Subdivision improvements shall be constructed only under the supervision of a Licensed Professional Engineer employed by the developer. Construction of subdivision improvements may begin only after a Permit to Develop is issued, and all other required permits outside these regulations are issued. Quality control will be required during construction. The following requirements shall be done at a minimum to ensure the work is done in accordance with the approved construction plans:

(1) The developer shall employ a qualified testing laboratory to perform compaction tests on the road sub-grade and base before the placement of the first layer of paving. After the base is placed and compacted, and before paving operations begin, the developer shall provide copies of all compaction test reports to the Tuscaloosa County Works Department and an inspection must be conducted by the Tuscaloosa County Public Works Department. After the inspection is conducted, and upon the approval of the County Engineer, paving operations may begin.

(2) The developer's engineer shall ensure that a qualified inspector, experienced in road construction, conducts an inspection everyday there is activity at the site. The inspector shall maintain a logbook of all inspections, which shall be provided to Tuscaloosa County Department of Public Works for review upon completion of construction.

The Tuscaloosa County Public Works Department may at any time during construction of a subdivision request copies of all documentation related to inspections, test reports, and calculations. In addition, The Tuscaloosa County Public Works Department may, at its discretion, conduct periodic inspections of all improvements and ADEM requirements during the construction of a subdivision.

SECTION 4-9 FINAL PLAT PROCEDURES AND APPROVAL

The final plat meeting the requirements set forth in Section 4-9-1 shall be submitted upon meeting one of the conditions list below. Once the final plat has been signed and recorded, the developer may proceed with the actual sale, transfer, or lease of lots. No building development shall take place until the final plat has been recorded in the Office of Probate Judge pursuant to these regulations.

(1) Immediately following approval of the preliminary plat for minor subdivisions.

(2) Once all required improvements have been installed and completed by the developer for major subdivisions and a maintenance bond in the amount of 15% of total cost of the improvements is accepted by Tuscaloosa County.

See Article VI for detailed requirements regarding final plat submittals that involve improvements.

4-9-1 FINAL PLAT REQUIREMETS

The Final Plat shall be prepared by a registered land surveyor and shall be clearly and legibly drawn at a convenient scale of not less than one inch equals one hundred feet. The Final Plat, as submitted for approval, shall be prepared on a suitable mylar, and shall be tied to an accepted corner based on the U.S. Government Survey. The sheet size shall be of such size as acceptable for filing at the Office of the Probate Judge (24"x18"). The Final Plat shall include the following:

(1) Tract boundary lines, right-of-way lines of streets, all easements and other rights-of-ways, property lines of lots with accurate dimensions, bearings or deflection angles, radii, arcs, and central angles of curves, minimum building setback lines .

(2) The proper name and right-of-way width of each street and other rights-of-way. Full right-of-way widths and the width from the centerline to the edge of the right-of-way must be clearly depicted. No "Unnamed Public Road" descriptions will be allowed.

(3) Location, dimensions, purposes and restrictions of any easements. All easements require one or both of the following notes:

For public or utility easements:

NOTE: ALL EASEMENTS SHOWN ON THIS PLAT ARE FOR PUBLIC UTILITES, SANITARY SEWERS, STORM SEWERS, AND STORM DITCHES AND MAY BE USED FOR SUCH PUPOSES TO SERVE PROPERTY BOTH WITHIN AND WITHOUT THIS SUBDIVISION. NO PERMANENT STRUCTURE OF OTHER OBSTRUCTION SHALL BE LOCATED WITHIN THE LIMITS OF A DEDICATED EASEMENT.

For private easements:

NOTE: THE PRIVATE ACCESS EASEMENT AS SHOWN ON THIS MAP OR PLAT DOES NOT CONSTITUTE A DEDICATION OF THE SAME AS A PUBLIC RIGHT-OF-WAY AND WILL NOT BE IMPROVED OR MAINTAINED BY TUSCALOOSA COUNTY UNTIL SUCH TIME THAT THE DEPICTED EASEMENT HAS BEEN APPROVED.

(4) Number to identify each lot

(5) Location of monuments.

(6) Reference to recorded subdivision plats of adjoining platted land by Plat Book and Page Number

(7) Title, legend, graphic scale, north arrow, name and registration number of subdivision land surveyor and engineer, date of plat, the quarter sections in which the subdivision is located.

(8) Location and elevation of floodway with FEMA map information; if applicable; If the property is located within a floodway, the plat shall contain the following marginal note:

NOTE: NO FILLING OR CONSTRUCTION SHALL BE ALLOWED IN THE PORTION OF THIS SUBDIVISION DESIGNATED AS "FLOODWAY" WITHOUT THE WRITTEN PERMISSION OF THE CITY OR COUNTY ENGINEER, AS APPLICABLE.

(9) Any lot or portion of a lot lying outside the floodway but below the 100-year flood elevation shall contain a note indicating the minimum first floor elevation for any habitable structure to be built thereon. Said minimum first floor elevation shall be equal to the 100-year flood plus one foot.

(10) If a plat contains any lots abutting the Lake Tuscaloosa Acquisition Line, the plat shall contain the following marginal note:

NOTE: THE PROPERTY ON THE LAKE SIDE OF THE LAKE TUSCALOOSA ACQUISITION LINE IS PROPERTY OF THE CITY OF TUSCALOOSA, AND MAY NOT BE BUILT UPON, DREDGED, FILLED, OR OTHERWISE ALTERED EXCEPT IN CONFORMITY WITH APPLICABLE ORDINANCES AND REGULATIONS OF THE CITY AND PURSUANT TO ALL REQUIRED PERMITS AND LICENSES.

(11) If plat contains newly constructed roads, a note from the engineer stating that the road(s) conforms to current AASHTO standards. The following note shall be required on final plats with road improvements:

"I,_____A REGISTERED ENGINEER, STATE TO THE BEST OF MY KNOWLEDGE, INFORMATION AND BELIEF, THAT THE DESIGN AND CONSTRUCTION OF ALL STRUCTURES, ROADWAYS, OR OTHER IMPROVEMENTS ASSOCIATED WITH THIS SUBDIVISION MEETS OR EXCEEDS APPLICABLE AASHTO STANDARDS AS STATED IN "A POLICY ON GEOMETRIC DESIGN OF HIGHWAYS AND STREETS, 6th EDITION."

_____
(ENGINEER'S NAME)
AL REG NO

(12) Source of Information/Title

The following endorsements, dedications, and certificates shall be placed on the final plat:

(a) Licensed Land Surveyor's Certificate and description of land platted;

(b) Licensed Engineer's Certificate of Engineering Design and Construction, if applicable;

(c) Dedication by owner;

(d) A notary's acknowledgment of the dedication certificate referred to in (c), commission expiration date, and notary seal;

(e) A Certificate of Approval by the County Engineer of Tuscaloosa County.

(f) A Certificate of Approval by the Tuscaloosa County Health Department;

(g) A Certificate of Approval by the City Planning Department and City Engineer; if applicable.

(h) A Certificate of Approval by the Tuscaloosa County Department of Planning and Community Development; if applicable.

The above certificates shall be lettered or typed on the final plat in such a manner as to insure that said certificates will be legible on any prints made there from.

4-9-2 "AS BUILT" CONSTRUCTION PLANS AND INSPECTION REPORTS

At the time of Final Plat submittal for a major subdivision, the developer shall also submit an "As Built" set of construction plans in a digital format and one hard copy. The hardcopy must be signed and stamped by a registered professional engineer. Copies of compaction testing reports and inspector's activity reports will also be required prior to final plat signature by the County Engineer.

ARTICLE V

DEVELOPMENT STANDARDS

5-1 MINIMUM REQUIREMENTS
5-2 GENERAL REQUIREMENTS
5-3 ROAD OR STREET PLAN
5-4 DESIGN STANDARDS

SECTION 5-1 MINIMUM REQUIREMENTS

In addition to the requirements established herein, the following minimum requirements are established for all subdivision plats:

(1) All applicable statutory provisions;

(2) Any special requirements and/or rules of the Tuscaloosa County Health Department;

(3) The rules and standards of the Alabama Department of Transportation if the subdivision or any lot contained therein abuts a state highway;

(4) The rules and standards of the Alabama Department of Environmental Management (ADEM) and any other appropriate state or federal agencies;

(5) The rules and regulations as set forth by the Standards of Practice for Land Surveying in the State of Alabama as adopted by the Alabama Board of Licensure for Professional Engineers and Land Surveyors.

(6) A floodzone development permit (a Development Permit) shall be required if any part of the subdivision falls within a special flood hazard area according to the Tuscaloosa County Flood Damage Prevention Ordinance.

Plat approval may be withheld if the subdivision is not in conformity with the above guidelines or the policy and purpose of these regulations as established in Article I of these regulations.

SECTION 5-2 GENERAL REQUIREMENTS

5-2-1 CHARACTER OF THE LAND

Development of any land within the floodplain shall be governed by the Tuscaloosa County Flood Damage Prevention Ordinance. The ordinance shall supplement these regulations to govern floodplain and floodway issues.

5-2-2 SUBDIVISION NAME

The proposed name of the subdivision shall not duplicate, or too closely approximate phonetically, the name of any other subdivision in the area covered by these regulations. The County Engineer shall have final authority to reject the name of the subdivision. Such rejection shall be made at the pre-design review stage or prior to the final plat being signed by the County Engineer. All subdivisions being developed in sections or phases shall be named in order as the plats are recorded.

5-2-3 WATERBODIES AND WATERCOURSES

If a tract being subdivided contains a water body, or portion thereof, lot lines shall be drawn as to distribute the entire ownership of the water body among adjacent lots. The County Engineer may approve an alternative plan provided the ownership of and responsibility for the safe maintenance of the water body is so placed that it will not become a County responsibility. No public roadways will be approved which provide access across dams nor will any part of a lake dam be allowed on the public right-of-way.

SECTION 5-3 ROAD OR STREET PLAN

The arrangement, character, extent, location, and grade of all roads shall be laid out according to good land planning principles and shall be integrated with all existing and planned roads. Consideration for the planning of new roads shall include topographical conditions, public convenience, public safety, and the proposed uses of land to be served by them. All lots must have access to a City, County, or State road.

5-3-1 MARGINAL ACCESS ROADS

Where, in the opinion of the County Engineer, development which abuts or has included within the proposed subdivided area any arterial, the County Engineer may require a marginal access road, or other treatment which may be necessary, to provide for the adequate protection of properties and to afford separation of through traffic and local traffic.

5-3-2 ADDITIONAL WIDTH ON EXISTING ROADS:

Subdivisions that adjoin existing streets with inadequate right-of-way shall dedicate additional right-of-way to meet the minimum requirements.

(1) The entire right-of-way shall be provided where any part of the subdivision is on both sides of the existing street.

(2) When the subdivision is located on only one side of an existing street, a minimum of one-half of the required right-of-way, measured from the centerline of the existing street, shall be provided.

5-3-3 ROAD NUMBERS AND NAMES

Proposed roads, which are obviously in alignment with other named or numbered roads, shall bear the assigned name or number of the existing roads. The Tuscaloosa County E9-1-1 Communications District shall approve all new road names.

5-3-4 VACATING A ROAD OR EASEMENT

Vacation of a road or easement shall be in accordance with the procedures set out in Code of Alabama 1975 § 23-4-1, et seq. as amended, if by the County, and Code of Alabama 1975 § 23-4-20 et seq. as amended, if by abutting land owners.

5-3-5 FRONTAGE ON IMPROVED ROADS

No subdivision shall be approved unless the area to be subdivided has frontage on, and access of at least thirty feet from:

a) an existing road maintained by the State, County or City or;

b) A street or highway shown upon an approved plat recorded in the Tuscaloosa County Judge of Probate Office. Such street or highway must be improved as required by these subdivision regulations and be secured by a Maintenance Bond as required under these subdivision regulations, with the width and right-of-way required by these subdivision regulations or;

c) Private ingress / egress easements as set forth in these regulations in Section 5-4-2

5-3-6 TOPOGRAPHY AND ARRANGEMENT

(1) Roads shall be laid out to conform as much as possible to the topography, to discourage use by through traffic, to permit efficient drainage and utility systems, and to require the minimum number of streets necessary to provide convenient and safe access to property.

(2) The rigid rectangular gridiron street pattern is discouraged whenever possible. The use of traffic calming devices, curvilinear streets, cul-de-sacs, or multiple access roads to the subdivision shall be encouraged where such use will result in a more desirable layout. The use of more than one access to a subdivision is recommended and shall be addressed at the pre-design conference.

(3) Proposed roads shall be extended to the boundary lines of the tract to be subdivided, unless prevented by topography or other physical conditions, or unless in the opinion of the County Engineer such extension is not necessary or desirable for the coordination of the layout of the subdivision.

5-3-7 ACCESS TO ARTERIALS

Where a subdivision borders on or contains an existing or proposed arterial, the County Engineer may require that access to such arterial be limited by the following means:

(1) The subdivision of lots so as to back on to the arterial and front onto a parallel minor road with no access to be provided from the arterial, and screening to be provided along the rear property portion of such lots;

(2) A series of cul-de-sacs, U-shaped streets, or short loops entered from and designed generally at right angles to such a parallel street, with the rear lines of their terminal lots backing onto the arterial;

(3) A marginal access of service road (separated from the arterial by a planting or grass strip and having access thereto at suitable points).

5-3-8 EXCESS RIGHTS-OF-WAY OR EASEMENTS

Right-of-way or easement widths in excess of the standards designated in these regulations shall be required whenever, due to topography or other conditions, additional width is necessary to provide earth slopes. It shall be the responsibility of the developer to obtain additional width on private easements if necessary due to construction requirements.

5-3-9 RAILROAD CROSSINGS

Plans and specifications for proposed installations of roadways and rights-of-way pertaining to railroad crossings shall be submitted to the appropriate governing bodies for approval and the issuance of the required permits. All required permits shall be issued or obtained prior to final approval of the construction plans.

5-3-11 LOTS

Residential lots shall comply with the following requirements:

(1) The minimum lot size shall comply with the regulations of the Tuscaloosa County Department of Public Health.

(2) Where land is subdivided into larger parcels than ordinary building lots, such parcels shall be arranged so as to allow for the opening of future roads and logical further re-subdivision.

(3) Depth and width of properties reserved for development purposes shall be adequate to provide for off-street parking and loading for the use contemplated.

(4) Each flag lot shall have a minimum road frontage of 30 feet.

(5) Flag lots shall not be further subdivided.

SECTION 5-4 DESIGN STANDARDS

Regardless of whether or not the developer intends to seek County acceptance of roads within the subdivision, the following design standards shall be considered minimum requirements for all subdivisions.

If the County establishes separate requirements for non-residential subdivisions, they shall be such as the County Commission deems appropriate, but in no event be less than the requirements of a residential subdivision unless the developer is granted a variance under the procedures set forth in Article VII.

5-4-1 RIGHT-OF-WAY WIDTHS

Right-of-way should be of sufficient width to accommodate the construction of the roadway in its entirety, including adequate drainage and future maintenance without encroaching on adjacent properties. Tuscaloosa County has established a minimum right-of-way requirement of 50 feet in width for Local Service Streets with curb and gutter or valley gutter, and 60 feet in width without curb and gutter, 60 feet minimum width for Minor Collector Roads, and 80 feet minimum width for Collectors. Additional width may be required for construction and/or maintenance. Dedicated right-of-way directly adjacent to the subdivision should be clearly labeled on the plat, as well as right-of-way outside the subdivision limits. Undedicated right-of-way outside of the subdivision should be labeled as "width varies."

A minimum right-of-way of 50 feet will be allowed in subdivisions containing lots with a minimum lot size of 1 acre and where the paved surface will be constructed 20 feet wide with shoulders 4 feet in width.

The owner/developer shall be required to secure right-of-way from the proposed development along any existing road to a County maintained road or as directed by the County Engineer. Tuscaloosa County will not accept right-of-way which is not improved to present design specifications. When the subdivision is located on only one side of an existing street, a minimum of one-half of the required right-of-way, measured from the centerline of the existing street, shall be provided.

5-4-2 EASEMENTS

Utility and Drainage Easements: Easements must be a minimum of twenty (20) feet in width and be located along the side or rear lot lines as required for utility lines, underground mains, and cables. Storm drainage easements, including off-site easements, will be required, when necessary, for the control of surface drainage. When easements are required, each Final Plat shall contain the following marginal note:

"NOTE: ALL EASEMENTS SHOWN ON THIS PLAT ARE FOR PUBLIC UTILITES, SANITARY SEWERS, STORM SEWERS, AND STORM DITCHES AND MAY BE USED FOR SUCH PUPOSES TO SERVE PROPERTY BOTH WITHIN AND WITHOUT THIS SUBDIVISION. NO PERMANENT STRUCTURE OF OTHER OBSTRUCTION SHALL BE LOCATED WITHIN THE LIMITS OF A DEDICATED EASEMENT."

Private Access Easements: Private access easements will be allowed for access to a County maintained road in conjunction with the following provisions:

i. Lots or parcels must be three acres or greater in size

ii. No more than three lots or parcels will be allowed using a common access easement as the source of ingress-egress, regardless if said easement existed prior to the new subdivision being created. Such easement shall not exceed twelve hundred feet in length.

iii. Easements to any parcels platted shall be no less than thirty feet in width. If multiple easements are required, said easements must be a minimum thirty feet apart in distance between the adjoining margins in said easements.

iv. A gate must be placed at the entrance to the easement signifying that the road is not a public road. Also, a sign must be placed at the entrance depicting its "private" status prior to the plat being signed.

v. A statement or note must be placed upon the plat with the following verbiage:

"THE PRIVATE ACCESS EASEMENT AS SHOWN ON THIS MAP OR PLAT DOES NOT CONSTITUTE A DEDICATION OF THE SAME AS A PUBLIC RIGHT-OF-WAY AND WILL NOT BE IMPROVED OR MAINTAINED BY TUSCALOOSA COUNTY UNTIL SUCH TIME THAT THE DEPICTED EASEMENT HAS BEEN APPROVED."

<u>The above note must also be included within any documents of conveyance.</u>

vi. Written verification that all private access easements have been obtained and such documents must be submitted with the final plat.

5-4-3 MINIMUM STREET DESIGN STANDARDS

All streets shall be platted along contours which will minimize grading and increase sight distance wherever practicable with consideration given to the anticipated uses of the land.

5-4-4 STREET PLAN AND PROFILE

Street plan and profile for each proposed street must be submitted for review and approval. These drawings must include:

i. Location of all existing and proposed streets within and adjacent to the subdivision.

ii. Widths of existing and proposed rights-of-way shall be clearly identified and rights-of-way locations and widths for any street considered part of the street plan.

iii. Proposed street signage.

iv. Proposed street names, which are subject to approval by the Tuscaloosa County E 9-1-1 Communications District.

v. Plan and profile views of all streets.

vi. Typical cross-sections of proposed streets.

vii. Complete horizontal and vertical curve data along the centerline of each street, superelevation data, superelevation method used, and maximum rate table. The minimum radius of horizontal curves and minimum length of vertical curves shall comply with AASHTO guidelines.

viii. Sidewalks (if required).

5-4-5 DESIGN SPEEDS

Proposed design speeds shall be designated by the developer's engineer on the plan and profile sheets. Design speeds shall not be less than 25 miles per hour. The County Engineer may dictate the design speeds for all streets.

Minimum design speeds shall be utilized as follows:

Local Service Street - 25 mph
Minor Collector Street - 35 mph
Collector Street - 35 mph

5-4-6 STREET GRADES

Street grades should not exceed 12 percent. Grades of relatively short length may be increased to 15 percent upon approval of the County Engineer.

5-4-7 GEOMETRIC DESIGN

All streets shall be designed to conform to the Alabama Department of Transportation County Road Design Policy, Design Criteria for New and Reconstructed Roadways and Bridges with less than 2,500 ADT. In the event the ADT is equal to or greater than 2,500 the alignment shall be designed to conform to the current edition of AASHTO's A Policy on Geometric Design of Highways and Streets.

5-4-8 INTERSECTIONS

Streets shall intersect as nearly at right angles as possible and in no case at an angle of less than 75 degrees. Street intersections shall not have a centerline offset of less than 150 feet. The minimum curb radius at all intersections shall not be less than 25 feet.

5-4-9 TRAFFIC CALMING

Residential local streets shall incorporate traffic calming measures in the design of all subdivisions to encourage driver and pedestrian safety in subdivisions.

Speed Control Points: The maximum road length between speed control points shall be 800 feet. Speed control points if warranted by the current edition of the Manual of Uniform Traffic Control Devices or other traffic calming devices including, but not limited to, crossing islands, paving treatment, traffic circles, chicanes, serpentine design, speed tables, and raised intersection pedestrian crossings.

5-4-10 SUB-GRADE AND BASE MATERIAL

All streets which are to be dedicated to Tuscaloosa County shall have sub-grade which is well drained, stable, and substantially free of organic material. The sub-grade must also meet the compaction requirements noted on the typical street sections. All streets shall require a 6 inch stone base that shall be compacted. The base material used shall meet the compaction requirements noted on the typical street sections. The developer may use clay-gravel base material provided the compacted thickness is 8 inch and a base analysis is submitted and approved by the County Engineer prior to installation.

5-4-11 PAVEMENT

All streets are to be paved with two surface treatments. The first layer shall consist of Bituminous Plant Mix Binder applied at a rate of 200 pounds per square yard according to ALDOT standards and specifications. The second layer consisting of a Bituminous Plant Mix Seal applied at a rate of 150 pounds per square yard according to ALDOT standards and specifications. Appropriate ESAL ranges should be used based upon projected traffic counts. The final wearing surface must be completed and a maintenance bond in place before the final plat is approved.

5-4-12 CUL-DE-SACS AND DEAD END STREETS

Dead end streets shall be provided with a turnaround having a right-of-way radius shall not be less than sixty (60) feet and a right-of-way diameter of one hundred twenty (120) feet. Cul-de-sac streets shall not exceed more than 600 feet in length.

5-4-13 STREET DRAINAGE FEATURES

Culverts

a. All pipes and culverts including driveway pipes must be Class III reinforced concrete pipe.

b. A special design drawing will be required for any drainage structure having a required end area of 19 square feet or more. Reinforced concrete drainage structures shall be constructed in accordance with standard drawings and

specifications approved by the County Engineer. All drawings must bear the seal and signature of a Registered Professional Engineer licensed to practice in the State of Alabama

Headwalls

Headwalls with wing walls or the use of sloped paved end treatments shall be used on pipe culverts, with the exception of driveway pipes. All end treatments shall be shown on the approved plans.

Curb and Gutter

a. All curb and gutter, and valley gutter shall be constructed in accordance with the standard drawings contained in Appendix XIII.

b. Combination curb and gutter, valley gutter, and sidewalks shall be constructed of Portland cement concrete which has a compressive strength of 3000 PSI. Installation shall be on a prepared subgrade and conform to the cross-section shown on the plans. The surface finish of the concrete shall have a light broomed or burlap drag texture. The edges shall be smoothed with a radius tool.

c. Transverse contraction joints shall be constructed at intervals not exceeding twenty 20 feet in combination curb and gutter and valley gutter. Joint depth shall be no less than one-fifth of the cross-section of concrete. Sawed contraction joints shall be done early after the concrete has set to prevent the formation of uncontrolled cracking. Expansion joints shall be constructed at immovable structures and at points of curvature for short radius curves. Filler material for expansion joints shall be per ALDOT standard specifications. Construction joints may be either expansion or butt-type joints.

d. Concrete shall be placed on accordance with ALDOT standards.

e. Valley gutter may be substituted for combination curb and gutter, as long as the design speed is 25 mph.

f. The developer shall be required to repair damaged curb and gutters before acceptance by the County for maintenance from nearest joint to nearest joint.

Inlets

a. All street inlets to be "Type S" per ALDOT standards. Any other inlet type must be approved by the County Engineer.

b. All yard inlets shall be approved by the County Engineer.

c. Street drainage structure spacing shall not exceed 600 feet. Spread calculations must be submitted and approved by the County Engineer.

d. Concrete shall be in accordance with AASHTO current specifications. All side drain pipes shall be Class III Reinforced Concrete Pipe with a minimum size of 15 inches. All roadway cross drain pipes shall be Class III Reinforced Concrete Pipe with a minimum size of 18 inches. All joints shall be mortared per AASHTO current specifications.

5-4-14 SIDEWALKS

All sidewalks shall conform to the Americans with Disabilities Act standard requirements. Sidewalks may be required by the County Engineer where deemed necessary for public safety. Sidewalks are required on streets that serve 21 or more lots. Sidewalks located within a public or private street right-of-way shall comply with the following:

(1) Sidewalks shall be a minimum 4 feet wide.

(2) A minimum 4 feet grass strip between the sidewalk and the curb.

(3) Sidewalks shall be at least 4 inches thick and be built upon a compacted sub-grade. Where the sidewalk is a part of a driveway, thickness shall be increased to 6 inches. All concrete must have a compressive strength of 3000 PSI.

(4) The cross slope of a sidewalk shall be a minimum of one-quarter inch per foot and a maximum 2% sloping to the drainage collection system.

(5) Pedestrian ramps are required at all intersections. Intersections with standing curb shall have curb ramps that conform to the Americans with Disabilities Act.

(6) The developer shall be required to repair any sidewalks prior to acceptance by the County for maintenance.

5-4-15 UTILITIES

Where it is necessary for utilities to cross roadways, it shall be done before placement of base material unless a bore is utilized to install the utility under the roadway.

A. *Water mains* - The design and specifications of the distribution system shall meet the the applicable public water system or water authority requirements. The appropriate water authority shall provide documentation to the County Engineer that the water service plan is approved.

B. *Sewage Disposal* – Any sanitary sewers shown on construction plans shall be reviewed and approved by the appropriate municipality prior to approval of the construction plans by the County Engineer. All other types of sewage disposal systems must be approved by the Alabama Department of Public Health or other appropriate state agencies, as applicable, prior to approval of the construction plan by the County Engineer. The planning, construction, installation, and maintenance of the sanitary sewer lines must be in compliance with the resolution adopted by the Tuscaloosa County Commission on May 4, 2005 (Appendix X).

5-4-16 DRAINAGE IMPROVEMENTS

A. The engineer must provide a statement on the construction plans in regards to the storm drainage design as noted below:

"The drainage plan for <insert project name> has been designed such that when constructed according to the plans and specifications, within usual construction tolerances, there will be no adverse effects to adjacent of downstream properties"

B. A complete drainage plan showing contours, pipe sizes, locations, and drainage areas shall be submitted along with the profile grades and typical roadway section for approval. All drainage structures shall be designed for a 25 year, one hour rainfall event at a minimum.
C. All existing drainage structures, including the next drainage structure upstream and downstream, shall be shown on the preliminary plat.
D. All off-site drainage areas that drain through the development shall be included on the contour map along with acreage.
E. All drainage basins and peak flow rates shall be included for each drainage structure, as well as profiles for all new storm sewers and open ditches. All storm drainage calculations shall be signed by the design engineer.
F. Outlet velocities that are greater than five feet per second shall require an appropriate method of energy dissipation such as rip rap apron or other method designed by the engineer of record.
G. Typical Sections of all open ditches and swales shall be provided.
H. Any proposed new sidedrain pipes or other storm sewer pipes under the County's roadway must be shown on the preliminary plat and must be approved by the County Engineer.
I. The plans shall take into consideration the ultimate or saturated development of the tributary in which the proposed subdivision is located. On-Site stormwater detention may be required for certain developments.
J. Off-premise drainage easements and improvements may be required to handle the runoff from subdivision into a natural drainage channel.
K. All development in the County shall be in compliance with the Flood Damage Prevention Ordinance. The applicant should contact the County Engineer for a preliminary discussion on this matter prior to plan submittal.

5-4-17 STORMWATER DETENTION / RETENTION (IF REQUIRED)

All subdivisions in the County subject to stormwater detention or retention shall meet the minimum design requirements set forth in this section. Detention and retention facilities shall be designed for a 25 year, one hour rainfall at a minimum. Rainfall amounts shall be based on the latest available information. Each detention and retention facility shall provide for an emergency spillway designed to convey the 100 year rainfall event.

The minimum information submitted for a detention or a retention pond design shall be as follows:

a. Existing drainage area and peak flow to the facility.

b. Proposed drainage area and peak flow to the facility.

c. Inflow hydrograph.

d. Outflow hydrograph.

e. Storage-elevation plot.

f. Required storage volume, in acre-feet or cubic feet.

g. 100 year peak rainfall flow to the emergency spillway.

h. Statement of methodology used for detention facility design.

i. Provide for low flow ditch in reservoir.

j. Sides shall be grassed or paved.

k. Primary spillways must be equipped with a trash rack. Maximum opening between bars shall not exceed four inches.

l. Overflow sections, such as emergency spillways, shall be sodded or paved.

m. All detention or retention facilities shall be enclosed with a minimum five foot tall fence.

All detention and retention facilities that may be required in conjunction with the construction of a subdivision are to be maintained by the home owner's association of the subdivision in which it is located. Tuscaloosa County will not be responsible for maintenance of such areas. The home owner's association will be required to maintain these areas as required to protect the safety of all adjacent and downstream property owners.

5-4-18 INTERSECTIONS

All new roadway improvements intersecting with County roads shall be approved by the County Engineer. Improvements intersecting State highways must be approved by the Alabama Department of Transportation.

The location of intersections should be selected to avoid steep profile grades, short crest vertical curves, or sharp horizontal curves in order to insure adequate sight distance to the intersection.

5-4-19 TRAFFIC AND STREET SIGNS

Traffic and street signs shall meet the requirements set forth in the current edition of the Manual on Uniform Traffic Control Devices. All traffic control signs and road name signs shall be installed prior to the final plat being signed by the County Engineer.

Traffic control signs and road name signs are considered subdivision improvements and will be the responsibility of the developer. Sign installation may be accomplished independently or by the Tuscaloosa County Public Works Department. A copy of the plat depicting the location and type of traffic control shall be submitted to the Tuscaloosa County Public Works Department. Once the County Engineer approves the traffic control plan, the signs may then be installed by the developer. If requested by the developer, a cost proposal may be supplied by the Tuscaloosa County Works Department for the installation of the signs. The Public Works Department will coordinate these services and accept payment for signs and the installation of the signs. Checks shall be made payable to the "Tuscaloosa County Commission".

5-4-20 EROSION CONTROL

The design engineer shall submit an Erosion Control Plan in conjunction with the construction plans. A NPDES permit shall be the responsibility of the developer and shall be in accordance with the requirements of ADEM. Erosion control shall be installed and maintained until the County accepts the project for maintenance as to prevent off-site sedimentation. A stand of grass shall be established along shoulders and backslopes. Best management practices shall be required on all projects regardless of permitting requirements. Also, a posted ADEM permit shall be in place at the subdivision, if applicable. Proof of current ADEM registration and inspection reports shall be submitted to County Engineer at time of final plat submittal, if applicable.

5-4-21 DRIVEWAY TURNOUTS

Where subdivisions are developed along a County road, the developer's engineer must show the location of all driveways along with the site distance of each proposed driveway. Each driveway location shall be approved before driveway construction begins.

5-4-22 PRIVATE SUBDIVISIONS

Improvements within proposed private subdivisions shall meet all subdivision regulations and the private status shall not be effective until final plat recording. A gate with signage must be placed at the entrance to the easement depicting its "private" status prior to the plat being signed. The private status of the subdivision shall be clearly stated on the recorded final plat and on all deeds. As long as the subdivision remains private, the roads, structures and drainage shall be maintained by the developer or property owners. The deed shall note this to those who purchase property within the subdivision.

No subdivision shall be considered for private status if the intent is to purposely deny access or to land lock adjoining property.

If a private subdivision is recorded in the Tuscaloosa County Probate Office and all of the property owners at some future date desire to eliminate the private subdivision and substitute in its place a County maintained subdivision, the owners must petition the Tuscaloosa County Commission for tentative approval. If the Tuscaloosa County Commission gives tentative approval of the petition, the owners shall submit a subdivision plat to the Tuscaloosa County Public Works Department including improvements and repairs that may be required to comply with the Tuscaloosa County Subdivision Regulations

effective on the date of petition. It shall be the responsibility of the owners to prepare a revised final plat according to Articile IV for approval and recording in the Tuscaloosa County Probate Office.

5-4-23 NEIGHBORHOOD SUBDIVISIONS

These regulations seek to encourage sound innovations in residential planning developments. Therefore, if the owner/developer chooses to develop a neighborhood type subdivision, the following requirements shall apply:

1.) Open space which will amount to a total of not less than 20% of the gross land area to be developed is required. There shall be a Homeowner's Association which shall have an agreement for the maintenance of the common areas.

2.) Sidewalks shall be required and installed on at least one side of the streets in these subdivisions. All sidewalks shall be completed prior to the County accepting the maintenance bond on the streets. Sidewalks shall comply with Section 5-4-14.

3.) The roadways in this type of development may be built using valley gutter streets with the following specifications: fifty feet right-of-way with the roadway measuring twenty seven feet in width from back of gutter to back of gutter. The minimum roadway pavement width (not including gutters) shall be twenty-two; and thirty inch valley gutters will meet minimum standards.

5-4-24 Minimum Setback Lines

The minimum interior building setbacks lines shall be defined as the following:

30 feet along and adjacent to the front property line of the lot (abutting the street).
35 feet along and adjacent to the rear property line.
10 feet along and adjacent to both sides of the property line on each side (20 feet total).

Easements may be located within the minimum building setback lines.

ARTICLE VI
GUARANTEE OF COMPLETION OF IMPROVEMENTS

6-1 INSTALLATION OF REQUIRED IMPROVEMENTS
6-2 REQUIRED DOCUMENTATION FOR FINAL PLAT APPROVAL
6-3 MAINTENANCE AND FINAL ACCEPTANCE OF IMPROVEMENTS

SECTION 6-1 INSTALLATION OF REQUIRED IMPROVEMENTS

The developer shall be responsible for constructing all required improvements in the subdivision prior to obtaining a final plat signature from the County Engineer. These improvements shall include all items shown on the approved constructions plans, all layers of asphalt, traffic control devices, and sidewalks, if applicable. The water and sewer lines, if applicable, that are installed in the subdivision must be approved and accepted by the utility company that will be responsible for maintaining them prior to final plat signature by the County Engineer.

SECTION 6-2 REQUIRED DOCUMENTATION FOR FINAL PLAT APPROVAL

Upon completion of the improvements, the owner or engineer of record as indicated shall provide the County Engineer the following items to obtain final plat approval of a subdivision.

1. The engineer shall state that all improvements are complete in accordance with the approved construction plans.

2. The engineer shall state that these improvements are in compliance with the minimum standards specified by the subdivision regulations and the County Engineer.

3. The engineer shall state that the applicant knows of no defects from any cause in those improvements.

4. The owner shall state that these improvements are free and clear of any encumbrances or liens.

5. All testing results and inspection reports performed during construction of improvements.

6. An As-Built set of construction plans.

7. Required documentation of acceptance from the appropriate utility company for water and/or sewer lines.

8. A maintenance bond that meets the requirements of Section 6-3.

SECTION 6-3 MAINTENANCE OF IMPROVEMENTS

Upon verification that all subdivision improvements are complete, the developer shall submit a maintenance bond to Tuscaloosa County Commission. The surety shall be in the amount of 15% of the total cost of improvements in the subdivision and shall be in effect for 15 months from the date of final plat approval. The engineer of record shall provide the cost estimate to determine the 15% calculation for the maintenance bond. During this maintenance period, the developer or owner shall be required to maintain all rights-of-way and to construct, repair, replace, or maintain public improvements. The term Maintenance Bond has the following meaning:

1. A commercial bond secured by a surety company authorized to engage in bonds in and by the State of Alabama.

2. An irrevocable letter of credit that shall be automatically renewed until the subdivision has been accepted for maintenance by the County. The letter of credit shall bear the name of Tuscaloosa County Commission.

3. A Cashier's Check made out to Tuscaloosa County Commission.

Sixty days (60 days) prior to the end of the 15 month maintenance period, the developer or developer's engineer shall notify the County Engineer in writing requesting a final inspection. If the inspection reveals deficiencies beyond those caused by normal wear and tear, the County Engineer will notify the developer or developer's representative of such deficiencies and shall afford said party reasonable opportunity to correct any deficiencies. Upon correction of deficiencies, the responsible party shall notify the County Engineer in writing and request that the improvements be accepted for maintenance. If the County Engineer is satisfied that all requirements have been met and the deficiencies have been corrected, the County Engineer will have the subdivision placed on the agenda at the next regularly scheduled County Commission meeting asking that the Commission accept the subdivision by resolution. If the County Commission accepts the subdivision, the maintenance surety will be returned to the applicant.

In the event the developer fails to submit a request for final inspection as noted above, the County Engineer shall determine if any repairs are needed in order to bring the roadway in compliance and take the necessary surety required to complete said repairs. The remaining surety would be returned to the developer upon completion of the work. The subdivision would at that time be placed on the Commission agenda and recommended for acceptance by resolution.

If a developer, or any member, partner, or shareholder thereof, has developed one or more other subdivisions in the County with deficient improvements, the County's acceptance of the subject subdivision for maintenance may be withheld until all such other subdivision improvements are no longer deficient.

In the event the developer fails to perform as required by the bond, the County Attorney or his designee is authorized to file a lien equal to the amount of the bond against any lot or lots in the subdivision subject to the bond and owned by the developer executing the bond in default. This lien shall be a certified copy of a resolution passed by the Tuscaloosa County Commission and shall state the purpose and the amount of the lien and shall be recorded in the Office of Probate for Tuscaloosa County. The liens will not be satisfied until such time as the developer complies with the bond conditions or the surety pays the bond and if the lien remains unsatisfied for 90 days the County may collect on the lien as all debts are collected or liens enforced.

ARTICLE VII

WAVIERS

7-1 GENERAL
7-2 CONDITIONS

SECTION 7-1 GENERAL

A wavier may be granted in circumstances where the developer demonstrates that extraordinary hardships or practical difficulties may result from strict compliance with these regulations. The waiver request shall be sent to the Tuscaloosa County Public Works Department. The County Engineer shall review the request and the circumstances. The County Engineer shall make a recommendation in writing to the County Commission, with a copy provided to the developer, as to whether or not the variance should be granted.

If the County Commission recommends that the wavier be granted, they may recommend that it be conditioned upon the developer complying with special requirements as set out in the approval. Where the County Commission has recommended granting the wavier, they shall vote on the request prior to any construction of the development and a decision to grant the wavier shall be made by recorded vote and shall require a majority.

If the County Commission recommends that the request for wavier be denied, the developer shall redesign and resubmit to the County Engineer for further review.

In determining whether to grant the wavier, the County Commission shall make findings based upon the evidence presented to it in each specific case that:

1. The granting of the wavier will not be detrimental to the public safety, health, welfare, or injurious to other property;

2. The conditions for which the request for a wavier is based are unique to the property for which the wavier is sought and are not applicable generally to other property;

3. Because of the particular physical surroundings, shape, or topographical conditions of the specific property involved, a particular hardship to the owner would result, as distinguished from a mere inconvenience, if the strict letter of these regulations are carried out;

4. The wavier will not in any manner vary the provisions of other adopted policies and regulations of Tuscaloosa County.

SECTION 7-2 CONDITIONS

In approving variances, the County Commission may require such conditions as will, in its judgment, secure substantially the objectives, standards or requirements of these regulations.

The County Commission shall not grant any variance within the floodway unless the developer submits a study prepared by a registered professional engineer certifying that no increase in the 100-year flood level would result from the proposed development.

ARTICLE VIII

CONFLICT WITH PUBLIC AND PRIVATE PROVISIONS

8-1 PUBLIC PROVISIONS
8-2 PRIVATE PROVISIONS
8-3 ENCUMBRANCES

SECTION 8-1 PUBLIC PROVISIONS

These regulations are not intended to interfere with, abrogate, or annul any other ordinance, rule, regulation, statute, or other provision of law. Where any provision of these regulations impose restrictions that vary from those imposed by any other ordinance, rule, regulation, or other provision of law, the provisions of which are more restrictive or impose higher standards, as determined by the County Engineer, shall control.

SECTION 8-2 PRIVATE PROVISIONS

These regulations are not intended to abrogate any existing easement, covenant or any other private agreement or restriction; provided, however, that where the provision of these regulations are more restrictive or impose higher standards or regulations than such easement, covenant, or other private agreement or restriction, the requirements of these regulations shall govern. To the extent that any easement, covenant, or private agreement is inconsistent with these regulations or any determinations made by the County Commission in approving a subdivision or in enforcing these regulations, such private provisions shall be operative and supplemental to these regulations and any determinations made there from.

SECTION 8-3 ENCUMBRANCES

The right-of-way that is to be used for said public or private road shall not be encumbered by any pre-existing restrictions or reservations on the land, such as utility or drainage easements, that might limit the use of the right-of-way. Utility lines that cross the proposed right-of-way of said road in a transverse or perpendicular manner will be allowed, provided that prior approval must be attained from the Tuscaloosa County Public Works Department before the right-of-way will be allowed. Where an existing utility line will cross the proposed right-of-way, permission must also be granted from the utility company, in writing, stating their approval and the conditions for that approval. A copy of this letter shall be provided to the Tuscaloosa County Public Works Department for verification.

ARTICLE IX

LEGAL PROVISIONS

9-1 SEVERABILITY
9-2 SAVINGS PROVISION
9-3 INCORPORATION BY REFERENCE
9-4 AMENDMENT PROCEDURE FOR COMMISSION

SECTION 9-1 SEVERABILITY

If any part or provision of these regulations is adjudged invalid by any court of competent jurisdiction, such judgment shall be confined to its terms and shall not affect or impair the validity of the remainder of these regulations or their application to other persons or circumstances.

SECTION 9-2 SAVINGS PROVISION

Except as expressly provided in these regulations, these regulations shall have prospective application only and shall not be construed as abating, modifying, or altering any action, including any penalty, pending under any subdivision regulations in existence on the effective date of these regulations. These regulations shall not affect the right or liability of any person, firm, or corporation, nor operate as a waiver of any right of the County under any section or provision existing at the time of adoption of these regulations. Notwithstanding the foregoing, any application for plat approval made after the County Commission's adoption of these regulations which is pending on the effective date of these regulations shall be reviewed, approved, or disapproved in accordance with these regulations, provided that the owner or developer was given written notice at the time of application that these regulations would be utilized in the approval of the subdivision's design and development.

SECTION 9-3 INCORPORATION BY REFERENCE

Code of Alabama 1975, § 11-24-1 et seq., as amended, is attached hereto as Appendix IX, and is hereby specifically incorporated by reference and made a part of these regulations.

SECTION 9-4 AMENDMENT PROCEDURE FOR COMMISSION

The County Commission may adopt amendments to these regulations at a regularly scheduled meeting of the County Commission. In addition, the amendments shall not take effect for thirty (30) days after the action of the County Commission. Amendments adopted by the County Commission shall not apply to any plat submitted prior to the date that the amendments take effect.

APPENDIX I

PRE-DESIGN CONFERENCE REQUEST AND ATTENDANCE FORM

TUSCALOOSA COUNTY PRE-DESIGN CONFERENCE REQUEST AND ATTENDANCE FORM

(Please complete items 1 through 6 and submit to Public Works Department to schedule conference. No Subdivision Plat will be considered for approval until mandatory Pre-Design Conference requirement is meet.)

1. Name of Subdivision (if known): _____

2. Date Conference Requested: _____

3. Name of Owner/Developer: _____

4. Number of Proposed Lots: _____

5. Name of Engineer/Surveyor _____

6. General Location of Subdivision: _____

_____

Date Conference held/persons in attendance: _____

_____ _____

_____ _____

_____ _____

_____ _____

_____ _____

Key points discussed, problem areas identified, etc. at conference:

APPENDIX II

PRELIMINARY PLAT APPLICATION

PRELIMINARY PLAT APPLICATION FOR SUBDIVISION IN TUSCALOOSA COUNTY

Date: _____

1. Name of Subdivision _____

   Applicant Name_____

   Address _____

   City _____State_____

   Email_____

   Phone_____

2. Owner of Record _____

   Address _____

   City _____State_____

   Email_____

   Phone_____

3. Engineer _____

   Address_____

   City _____State_____

   Email_____

   Phone_____

4. Land Surveyor _____

   Address_____

   City _____State_____

   Email_____

   Phone_____

5. Attorney _____

Address _____

City _____ State _____

Email _____

Phone _____

6. Subdivision Location: _____

_____

_____

Total Acreage _____ Number of Lots / Units _____

7. Has this plat been before the Commission in the past? _____ If yes, have any changes been made since this plat was last before the Commission? _____

If applicable, please describe the changes _____

_____

_____

_____

_____

_____

8. List any waivers being requested.

9. Attach a list of all adjacent property owners' names and addresses.

10. Attach four (4) copies of preliminary plat.

11. Attach all construction plans.

APPENDIX III

RESOLUTION FOR THE ACCEPTANCE
OF A PRELIMINARY PLAT

STATE OF ALABAMA §

TUSCALOOSA COUNTY §

RESOLUTION ACCEPTING PRELIMINARY PLAT

WHEREAS, the County Engineer has reported to the Tuscaloosa County Commission that the developer has complied with all Tuscaloosa County Subdivision Regulations related to the preparation and presentation of a preliminary plat for a new development or the extension of an existing development; and

WHEREAS, the Tuscaloosa County Commission has been presented with the preliminary plat and accompanying information, and determines that there is no just reason to withhold approval of the preliminary plat.

NOW, THEREFORE, BE IT RESOLVED BY THE TUSCALOOSA COUNTY COMMISSION that the preliminary plat recommended for approval by the Tuscaloosa County Engineer is approved and accepted.

Approved at our regularly scheduled meeting on this the _____ day of _____, 2013.

_____
W. Hardy McCollum, Chairman
Tuscaloosa County Commission

_____
Melvin L. Vines
County Administrator

APPENDIX IV

PERMIT TO DEVELOP A SUBDIVISION

PERMIT TO DEVELOP A SUBDIVISION

THE STATE OF ALABAMA
TUSCALOOSA COUNTY

PERMIT NO._____

ISSUANCE DATE_____ EXPIRATION DATE_____

NAME OF SUBDIVISION_____

DEVELOPER_____

TYPE: ☐ MAJOR ☐ MINOR NO. OF PROPOSED LOTS_____

TUSCALOOSA COUNTY PRELIMINARY PLAT APPROVAL DATE_____

AUTHORIZED SIGNATURE_____
TUSCALOOSA COUNTY ENGINEER

THIS PERMIT MUST BE POSTED AT ALL TIMES DURING CONSTRUCTION ACTIVITY

TUSCALOOSA COUNTY PUBLIC WORKS DEPARTMENT
2810 35TH STREET TUSCALOOSA AL. 35401
TUSCALOOSA AL. 35401 PHONE: 345-6600 FAX: 345-6600

APPENDIX V

FLOW CHART

TUSCALOOSA COUNTY SUBDIVISION FLOW CHART

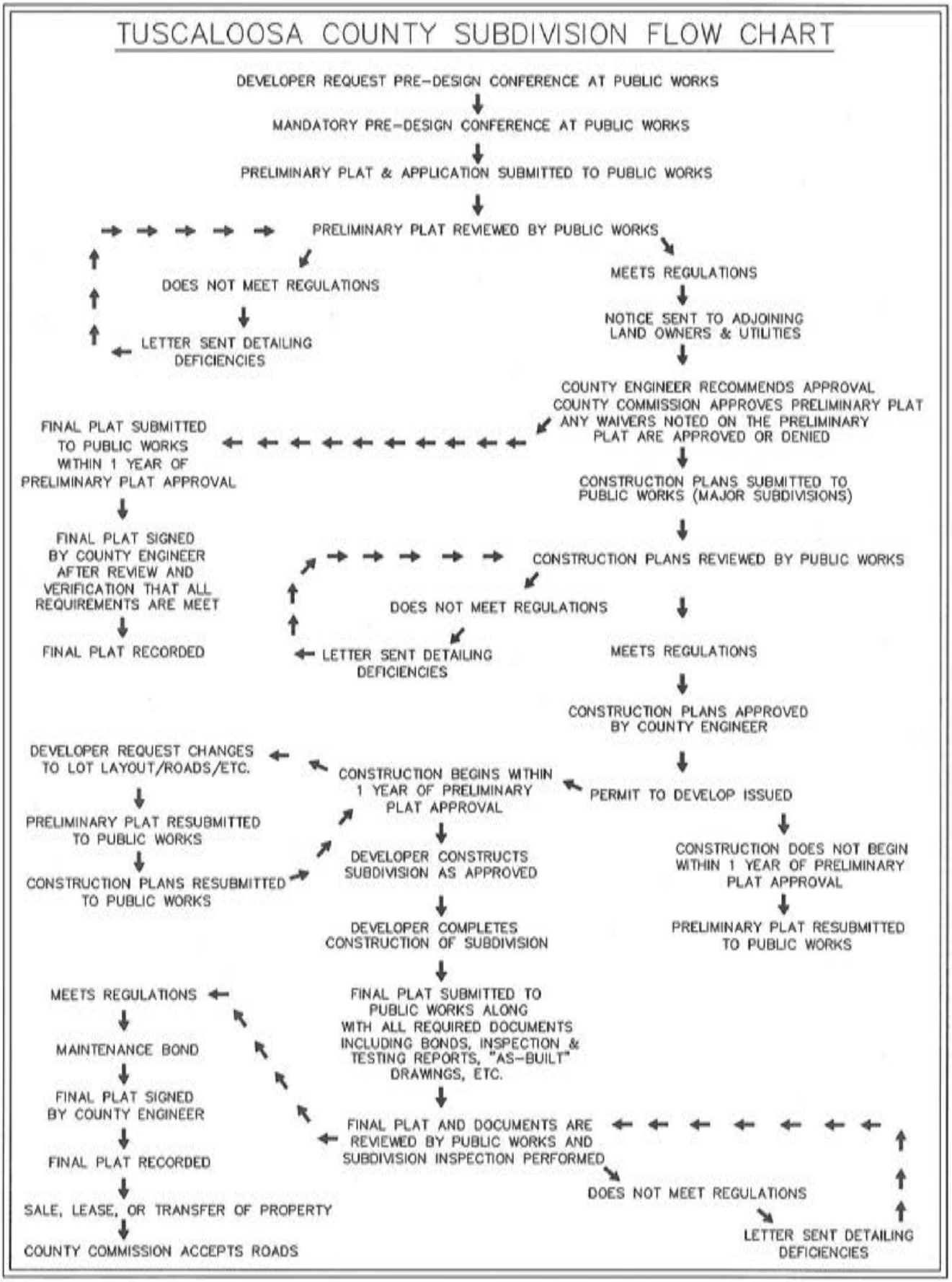

APPENDIX VI

FINAL PLAT CHECKLIST FOR MAJOR SUBDIVISION

Final Plat checklist for a Major Subdivision in Tuscaloosa County

DATE: _____

Name of Plat: _____

Developer: _____

Developer's Engineer/Surveyor: _____

Yes No

__ __ 1) Final plats shall have signature spaces provided for the following:

__ a) Owner/Developer
__ b) Registered Land Surveyor
__ c) Registered Engineer **(If applicable)**
__ d) Health Department
__ e) Tuscaloosa County Department of Planning and Community Development **(If applicable)**
__ f) Tuscaloosa County Engineer
__ g) City Engineer and Planning Departments **(If applicable)** _____
__ h) Notary Public with seal and commission expiration date

__ __ 2) Maps must be an original drawing on Mylar or any other high quality reproducible material 18"x24" in size

__ __ 3) Maps must show tract boundary lines, right-of-way lines of roads, lots lines with accurate dimensions, bearing and/or angles, all pertinent curve information, and minimum building setback lines.

__ __ 4) Names/Numbers and right-of-way widths of all roads/streets with right-of way must be clearly depicted on the map.

__ __ 5) Numbers to identify each lot or building site.

__ __ 6) Ties to the G.L.O. corners or other suitable boundary ties

__ __ 7) Title, graphic scale, north arrow, legend, and Source of Title

__ __ 8) Name, registration number, seal, and date of subdivisions land surveyor and/or engineer

__ __ 9) Location and elevation of FLOODWAY with FEMA map information

NOTE: NO FILLING OR CONSTRUCTION SHALL BE ALLOWED IN THE PORTION OF THIS SUBDIVISION DESIGNATED AS "FLOODWAY" WITHOUT THE WRITTEN PERMISSION OF THE CITY OR COUNTY ENGINEER, AS APPLICABLE.

__ __ 10) Plat contains lots abutting Lake Tuscaloosa Acquisition Line

NOTE: THE PROPERTY ON THE LAKE SIDE OF THE LAKE TUSCALOOSA ACQUISITION LINE IS PROPERTY OF THE CITY OF TUSCALOOSA, AND MAY NOT BE BUILT UPON, DREDGED, FILLED, OR OTHERWISE ALTERED EXCEPT IN CONFORMITY WITH APPLICABLE ORDINANCES AND REGULATIONS OF THE CITY AND PURSUANT TO ALL REQUIRED PERMITS AND LICENSES.

__ __ 11) Location, dimensions, purposes, widths and restrictions of any easements

__ __ 12) Easement Certificates (public or utility)

NOTE: ALL EASEMENTS SHOWN ON THIS PLAT ARE FOR PUBLIC UTILITES, SANITARY SEWERS, STORM SEWERS AND STORM DITCHES, AND MAY BE USED FOR SUCH PURPOSES TO SERVE PROPERTY BOTH WITHIN AND WITHOUT THIS SUBDIVISION. NO PERMANENT STRUCTURE OR OTHER OBSTRUCTIONS SHALL BE LOCATED WITHIN THE LIMITS OF A DEDCATED EASEMENT.

__ __ 13) Private Easement Statement

NOTE: THE PRIVATE ACCESS EASEMENT AS SHOWN ON THIS MAP OR PLAT DOES NOT CONSTITUTE A DEDICATION OF THE SAME AS A PUBLIC RIGHT-OF-WAY AND WILL NOT BE IMPROVED OR MAINTAINED BY TUSCALOOSA COUNTY UNTIL SUCH TIME THAT THE DEPICTED EASEMENT HAS BEEN APPROVED.

__ __ 13) Improvements

If the plat contains improvements, then the Surveyor must have copies of the following: (If in the County or Planning Jurisdiction of a Municipality)

__ __ I. A letter addressed to the County Engineer stating the following:
__ a) Cost of construction
__ b) Name, address, and phone number of the developer or owner responsible for the improvements
__ c) Entire length of each roadway centerline.

__ __ II. Bonding:

a.) *Maintenance Bond*: A maintenance bond equal to the amount of fifteen percent of the cost of construction

__ __ III. Engineer's statement on the plat:

"I, _____, a registered engineer, state to the best of my knowledge, information and belief, that the design and construction of all structures, roadways, or other improvements associated with this subdivision meets or exceed applicable ASSHTO standards as stated in A Policy on Geometric Design of Highways and Streets, 6th Edition. Signed with the Engineer's name and AL Registration No.

APPENDIX VII

FINAL PLAT CHECKLIST FOR MINOR SUBDIVISION

Final Plat Checklist for a Minor Subdivision in Tuscaloosa County

DATE: _____

Name of Plat: _____

Developer: _____

Developer's Engineer/Surveyor: _____

Yes No

__ __ 1) Final plats shall have signature spaces provided for the following:

__ a) Owner/Developer
__ b) Registered Land Surveyor
__ c) Registered Engineer **(If applicable)**
__ d) Health Department
__ e) Tuscaloosa County Department of Planning and Community Development **(If applicable)**
__ f) Tuscaloosa County Engineer
__ g) City Engineer and Planning Departments **(If applicable)** _____
__ h) Notary Public with seal and commission expiration date

__ __ 2) Maps must be an original drawing on Mylar or any other high quality reproducible material 18"x24" in size

__ __ 3) Maps must show tract boundary lines, right-of-way lines of roads, lots lines with accurate dimensions, bearing and/or angles, all pertinent curve information, and minimum building setback lines.

__ __ 4) Names/Numbers and right-of-way widths of all roads/streets with right-of way must be clearly depicted on the map.

__ __ 5) Numbers to identify each lot or building site.

__ __ 6) Ties to the G.L.O. corners or other suitable boundary ties

__ __ 7) Title, graphic scale, north arrow, legend, and Source of Title

__ __ 8) Name, registration number, seal, and date of subdivisions land surveyor and/or engineer

__ __ 9) Location and elevation of FLOODWAY with FEMA map information

NOTE: NO FILLING OR CONSTRUCTION SHALL BE ALLOWED IN THE PORTION OF THIS SUBDIVISION DESIGNATED AS "FLOODWAY" WITHOUT THE WRITTEN PERMISSION OF THE CITY OR COUNTY ENGINEER, AS APPLICABLE.

__ __ 10) Plat contains lots abutting Lake Tuscaloosa Acquisition Line

NOTE: THE PROPERTY ON THE LAKE SIDE OF THE LAKE TUSCALOOSA ACQUISITION LINE IS PROPERTY OF THE CITY OF TUSCALOOSA, AND MAY NOT BE BUILT UPON, DREDGED, FILLED, OR OTHERWISE ALTERED EXCEPT IN CONFORMITY WITH APPLICABLE ORDINANCES AND REGULATIONS OF THE CITY AND PURSUANT TO ALL REQUIRED PERMITS AND LICENSES.

__ __ 11) Location, dimensions, purposes, widths and restrictions of any easements

__ __ 12) Easement Certificates (public or utility)

NOTE: ALL EASEMENTS SHOWN ON THIS PLAT ARE FOR PUBLIC UTILITES, SANITARY SEWERS, STORM SEWERS AND STORM DITCHES, AND MAY BE USED FOR SUCH PURPOSES TO SERVE PROPERTY BOTH WITHIN AND WITHOUT THIS SUBDIVISION. NO PERMANENT STRUCTURE OR OTHER OBSTRUCTIONS SHALL BE LOCATED WITHIN THE LIMITS OF A DEDCATED EASEMENT.

__ __ 13) Private Easement Statement

NOTE: THE PRIVATE ACCESS EASEMENT AS SHOWN ON THIS MAP OR PLAT DOES NOT CONSTITUTE A DEDICATION OF THE SAME AS A PUBLIC RIGHT-OF-WAY AND WILL NOT BE IMPROVED OR MAINTAINED BY TUSCALOOSA COUNTY UNTIL SUCH TIME THAT THE DEPICTED EASEMENT HAS BEEN APPROVED.

APPENDIX VIII

MAINTENANCE BOND

MAINTENANCE BOND

STATE OF ALABAMA }
TUSCALOOSA COUNTY }

KNOW ALL MEN BY THESE PRESENTS, That we, _____ _____, as Principal, and _____ (hereinafter called the "Surety"), as Surety, do hereby acknowledge ourselves indebted and firmly bound and held unto Tuscaloosa County Commission (hereinafter called "County"), in the penal sum of _____, for the payment of which well and truly to be made lawful money of the United States, we do hereby bind ourselves, our successors and assigns and personal representatives, jointly and severally, firmly by these presents.

BUT THE CONDITIONS OF THE FOREGOING OBLIGATION OR BOND IS THIS:

WHEREAS, the Developer has developed certain lands within the jurisdiction of the Tuscaloosa County Commission as a subdivision; and

WHEREAS, the Developer has completed or has made bond insuring the completion of construction of the subdivision or development known as _____ _____, located generally in _____, and the final plat of said subdivision has been approved by the Tuscaloosa County Engineer; and

WHEREAS, request has been made to the County Engineer to approve the final plat and request will be made to the County to accept the subdivision streets, drainage structures, and other improvements, for maintenance by the County; and

WHEREAS, such approval and acceptance will not be given until the Developer, or his contractor, has furnished the County a satisfactory bond, in an amount equal to fifteen percent (15%) of the total construction cost of said improvements, for a period of 15 months following their completion and acceptance by the County.

NOW, THEREFORE, if the Developer shall maintain the street, drainage structures, and other improvements constructed in and for the above subdivision for a period of fifteen (15) months. If after fifteen (15) months the subdivision does not comply, it shall remain in full force and effect. If after fifteen (15) months, the subdivision does comply with the subdivision regulations, this obligation shall be null and void, otherwise

IN WITNESS WHEREOF, the Developer has executed, or caused the within bond to be executed, and the Surety has executed the same, or caused the same to be executed, by its duly authorized officers, on this the _____ day of _____, 20 ___.

_____
Principal

_____ _____

_____ _____
Surety

APPENDIX IX

RESOLUTION ACCEPTING STREETS IN SUBDIVISION
FOR COUNTY MAINTENANCE

RESOLUTION ACCEPTING STREETS IN
(SUBDIVISION NAME)

WHEREAS, the County engineer has reported to the Tuscaloosa County Commission that the Tuscaloosa County Public Works Department has inspected and found that the streets, together with the drainage structures in the streets in _____ subdivision are completed in accordance with the Subdivision Regulations of the Tuscaloosa County Commission, and that all of said construction has been done in accordance with the County specifications.

NOW, THERFORE, BE IT RESOLVED BY THE TUSCALOOSA COUNTY COMMISSION:

a. That the County accept the streets, together with the drainage structure in, and which are a part of, said streets which are located in dedicated street rights-of-way, for maintenance by the Tuscaloosa County Commission. The drainage structures described herein are those structures which are a part of or are located in the streets (curb and gutter, catch basins, flumes and pipes) and does not include any natural waterway which drains surface water in the area.

b. This resolution shall be effective on the date of the adoption thereof.

Adopted this _____ day of _____, 20___, by the

TUSCALOOSA COUNTY COMMISSION.

_____

W. Hardy McCollum, Chairman

Seal

_____

Melvin Vines, County Administrator

APPENDIX X

APPLICABLE STATE LAWS

Section 11-24-1

Definitions; regulation of lots, streets, drainage, utilities, etc.; developer to reimburse utility for uneconomical placement.

(a) When used in this chapter, the following words shall have the following meanings:

(1) COUNTY. A political subdivision of the state created by statute to aid in the administration of government.

(2) COUNTY COMMISSION. The chief administrative or legislative body of the county.

(3) STREETS. Streets, avenues, boulevards, roads, lanes, alleys, viaducts, and other roads.

(4) SUBDIVISION. The development and division of a lot, tract, or parcel of land into two or more lots, plats, sites, or otherwise for the purpose of establishing or creating a subdivision through the sale, lease, or building development. Development includes, but is not limited to, the design work of lot layout, the construction of drainage structures, the construction of buildings or public use areas, the planning and construction of public streets and public roads, and the placement of public utilities. A subdivision does not include the construction or development of roads or buildings on private property to be used for agricultural purposes.

(b) The county commission or like governing body of each county in the state shall be authorized to regulate the minimum size of lots, the planning and construction of all public streets, public roads, and drainage structures and require proper placement of public utilities to be located in proposed subdivisions of land or in proposed additions to subdivisions of land existing at the time of the enactment of this chapter where the subdivisions are situated outside the corporate limits of any municipality in the county. The placement of public utilities shall not be inconsistent with the requirements of the Southern Standard Building Code, state and federal laws, and regulations of state and federal regulatory agencies. If the county commission or like governing body of any county shall require the placement of public utility facilities in any subdivision or addition thereto in a manner which is other than the most economical method available from an engineering standpoint, then the developer of the subdivision or addition shall reimburse the utility for the difference in cost between the method so required by the county governing body and the most economical method available.

(c) The county commission or like governing body of each county in the state may establish a board of developers to make suggestions to the commission regarding the development and division of subdivisions. The board may advise the commission on the

contents of the regulations, revisions that need to be made to the regulations, and assist in resolving disputes between the commission and developers.

(Acts 1979, No. 79-553, p. 1002, §1; Acts 1997, No. 97-422, p. 718, §1.)

ection 11-24-2

Submission, review, and approval of plats; permit.

(a) It shall be the duty of the owner and developer of each subdivision to have all construction completed in conformity with this chapter and, prior to beginning any construction or development, to submit the proposed plat to the county commission for approval and obtain a permit to develop as required in this section. The permit to develop shall be obtained before the actual sale, offering for sale, transfer, or lease of any lots from the subdivision or addition to the public, it must include a plan to deliver utilities including water, and shall only be issued upon approval of the proposed plat by the county commission. As a condition for the issuance of a permit, the county commission may require any of the following for approval of the proposed plat:

(1) The filing and posting of a reasonable surety bond with the county commission by the developers of the proposed subdivisions or proposed additions to guarantee the actual construction and installation are in accordance with approved plans for public streets, public roads, drainage structures, and public utilities.

(2) The names and addresses of each adjoining landowner and utility subject to the notice as provided in subsection (b).

(3) A permit fee, which shall not exceed twenty-five dollars ($25).

(b) No proposed plat shall be approved or disapproved by the county commission without first being reviewed by the county engineer or his or her designee. Following the review, the county engineer or his or her designee shall certify to the commission whether the proposed plat meets the county's regulations. If the proposed plat meets the regulations, it shall be approved by the commission. Should the proposed plat be determined by the county engineer to be deficient in any regard, the county engineer shall detail the deficiency to the county commission along with a recommendation that it be disapproved. Notice of the recommendation of the engineer shall be sent to the owner or developer whose name and address appears on the submitted proposed plat by registered or certified mail at least 10 days before the recommendation shall be presented to the county commission for action. A similar notice shall be mailed to the owners of land immediately adjoining the platted land as their names appear upon the plats in the office of the county tax assessor and their addresses appear in the directory of the county or on the tax records of the county and to each utility affected thereby. Each utility notified in writing by the commission shall be given at least 10 days to review the proposed plat and

submit a written report to the commission as to whether all provisions affecting the service to be provided by the utility are reasonable and adequate. If any utility affected by the proposed plat is not properly notified then the approval or disapproval by the county commission shall not be valid until the affected utility has been given at least 10 days' notice prior to such approval or disapproval as provided by this subsection.

(c) In addition to the foregoing, once the owner or developer of all proposed subdivisions or proposed additions to existing subdivisions of land situated outside the corporate limits of any municipality in the county has met all requirements of the county's regulations, he or she shall submit the final plat of the developed subdivision or addition to existing subdivision to the county engineer for signature verifying that the subdivision or addition to existing subdivision meets the county's regulations. After the final plat has been signed by the county engineer, it shall be filed for record or received for filing in the office of the judge of probate. Subject to the penalties set out in Section 11-24-3, it shall be a violation of this chapter for the developer to file or to have filed any plat, deed, property description, or document of property transfer without full compliance with this section.

(d) Notwithstanding the provisions of subsections (a), (b), and (c), this section shall not apply to the sale, deed, or transfer of land by the owner to an immediate family member, except that, in the event that there is any sale, deed, or transfer of land by the owner or an immediate family member to someone other than an immediate family member, this chapter shall then apply to any subdivision of property as defined in subdivision (4) of subsection (a) of Section 11-24-1.

(Acts 1979, No. 79-553, p. 1002, §2; Acts 1997, No. 97-422, p. 718, §1; Act 2006-227, p. 390, §1.)

Section 11-24-3

Fines; injunctions; inspections; enforcement of chapter.

(a) Any owner or developer failing to comply with the permitting requirement or otherwise violating this chapter or any rule or regulation made pursuant to this chapter shall be fined one thousand dollars ($1,000) per lot that has been sold, offered for sale, transferred, or leased to the public.

(b) In the event that the developer or owner fails to comply with this chapter, the county commission shall have the right to enjoin action of the developer or owner by a civil action for the injunction brought in any court of competent jurisdiction or, in the event that work on the subdivision has been completed, to bring action to compel the developer or owner to comply with this chapter. In addition to injunction, the county commission may recover the penalty as provided by this section in any court of competent jurisdiction.

(c) The county commission may employ inspectors and may request the county license inspector to see that its rules and regulations are not violated and that the plans and specifications for the minimum size of lots, the planning and construction of public streets, public roads, and drainage structures, and the placement of public utilities are not in conflict with the rules and regulations of the county. The county commission may charge inspection fees, not to exceed actual costs, to be paid by the owners of the property inspected.

(d) This chapter may be enforced by the county license inspector under Section 40-12-10, including issuing citations as provided in subsection (j) of Section 40-12-10 for failure to properly obtain the permit to develop required pursuant to subsection (a) of Section 11-24-2. The license inspector may issue subsequent citations for failure to properly obtain a permit to develop if, after 30 days following the issuance of the previous citation for the same violation, the owner or developer of the subdivision has not made proper application for a permit pursuant to the requirements of this chapter. The applicable fines set out in subsection (a) shall be doubled and separately assessed against the owner or developer of the subdivision for each subsequent citation issued by the license inspector as provided herein.

(Acts 1979, No. 79-553, p. 1002, §3; Acts 1997, No. 97-422, p. 718, §1; Act 2006-227, p. 390, §1.)

APPENDIX XI

MAY 4, 2005 RESOLUTION AMENDING 1999 TUSCALOOSA COUNTY SUBDIVISION REGULATIONS REGARDING SANITARY SEWER IN COUNTY RIGHT-OF-WAY

W. HARDY MCCOLLUM
CHAIRMAN

ROBERT H. JOHNSTON
CLERK

No 6

MEMBERS
DON WALLACE
GARY YOUNGBLOOD
BOBBY MILLER
REGINALD MURRAY

COUNTY COMMISSION

TUSCALOOSA COUNTY ALABAMA
P.O. BOX 20113 • 714 GREENSBORO AVENUE
TUSCALOOSA, ALABAMA 35402-0113
205-349-3870

TO: Bobby Hagler, County Engineer

FROM: Robert H. Johnston, Clerk

DATE: May 19, 2005

SUBJECT: Resolution Amending the Current Tuscaloosa County Subdivision Regulations

Attached is referenced resolution adopted by the Tuscaloosa County Commission May 4, 2005.

Robert H. Johnston
Clerk

RHJ:lks

attachment

copy: file

Received
5-19-05

RESOLUTION AMENDING THE CURRENT TUSCALOOSA COUNTY SUBDIVISION REGULATIONS

WHEREAS, all subdivision plats that are recorded in Tuscaloosa County, Alabama are required to be approved by the Tuscaloosa County Engineer; and

WHEREAS, it has been determined by the Tuscaloosa County Commission that it is in the best interest of the general public in this County that all improvements planned for such subdivisions should be constructed in compliance with all applicable specifications; and

WHEREAS, the Tuscaloosa County Commission desires to establish requirements which will facilitate compliance with this policy.

NOW, THEREFORE, BE IT RESOLVED by the Tuscaloosa County Commission as follows:

1. That the County will allow the planning, construction, installation and maintenance of sanitary sewer lines along and under the newly constructed roads and streets of a platted subdivision that lies within the County and within a municipality's planning jurisdiction, provided that said sewer lines will be reviewed, monitored, maintained and repaired by the municipality, and further provided that said municipality must have its own sewerage maintenance facility and personnel equipped to perform any and all maintenance responsibilities.
2. The County will require that the planning, construction, installation and maintenance of any sanitary sewer lines constructed outside of the planning jurisdiction of a municipality as described in paragraph one shall be within the outer five feet of the public right of way for any public sanitary sewer or other utility.
3. That the municipality will accept any and all responsibilities for the maintenance and repair of said sewer lines by having a utility permit issued from the County before the subdivision is approved by the County Engineer and subsequently accepted for

maintenance by the Tuscaloosa County Commission; that said permit exists in perpetuity and that there will be no termination or expiration date.

4. That any and all private sewerage facilities or de-centralized systems, out-fall lines and/or collection lines are to be installed outside of any platted right-of-way (other than perpendicular crossings) and are the sole responsibility of the developers, homeowners association or other responsible party as it pertains to the maintenance and/or repairs to said sewage facilities; that the County will not accept any maintenance responsibilities for any of the aforementioned sewage facilities; that the County will not be responsible for damage or repair to any sewage line(s) or related structures within the County's right-of-way.

5. That there is nothing in the above resolution that will allow any other utility to be planned, constructed, installed or maintained under the roads and streets in any newly constructed subdivision, except as deemed appropriate by this Commission.

6. This resolution shall be effective on the date of the adoption thereof.

Adopted this the 4th day of May, 2005, by the TUSCALOOSA COUNTY COMMISSION.

W. Hardy McCollum, Chairman

Robert H. Johnston, Clerk

Seal

APPENDIX XII

NOVEMBER 17, 2010 RESOLUTION AMENDING 1999 TUSCALOOSA COUNTY SUBDIVISION REGULATIONS REGARDING BONDING REQUIREMENTS TO GUARANTEE THE COMPLETION OF SUBDIVISION IMPROVEMENTS

RESOLUTION AMENDING THE CURRENT TUSCALOOSA COUNTY SUBDIVISION REGULATIONS

WHEREAS, all subdivision plats that are recorded in Tuscaloosa County, Alabama are required to be approved by the Tuscaloosa County Engineer; and

WHEREAS, it has been determined by the Tuscaloosa County Commission that it is in the best interest of the general public in this County that all improvements planned for such subdivisions should be constructed in compliance with all applicable specifications; and

WHEREAS, the Tuscaloosa County Commission desires to establish requirements which will facilitate compliance with this policy.

NOW, THEREFORE, BE IT RESOLVED by the Tuscaloosa County Commission as follows:

1. The County will require a developer to post a commercial bond or irrevocable letter of credit as surety to secure the completion of a subdivision.

Adopted this the 17th day of November, 2010, by the TUSCALOOSA COUNTY COMMISSION.

W. Hardy McCollum, Chairman

Seal

Melvin Vines, County Administrator

APPENDIX XIII

TYPICAL STREET SECTIONS AND STANDARD DETAILS

TYPICAL STREET SECTION

(WITHOUT CURB AND GUTTER)
(NORMAL CROWN)

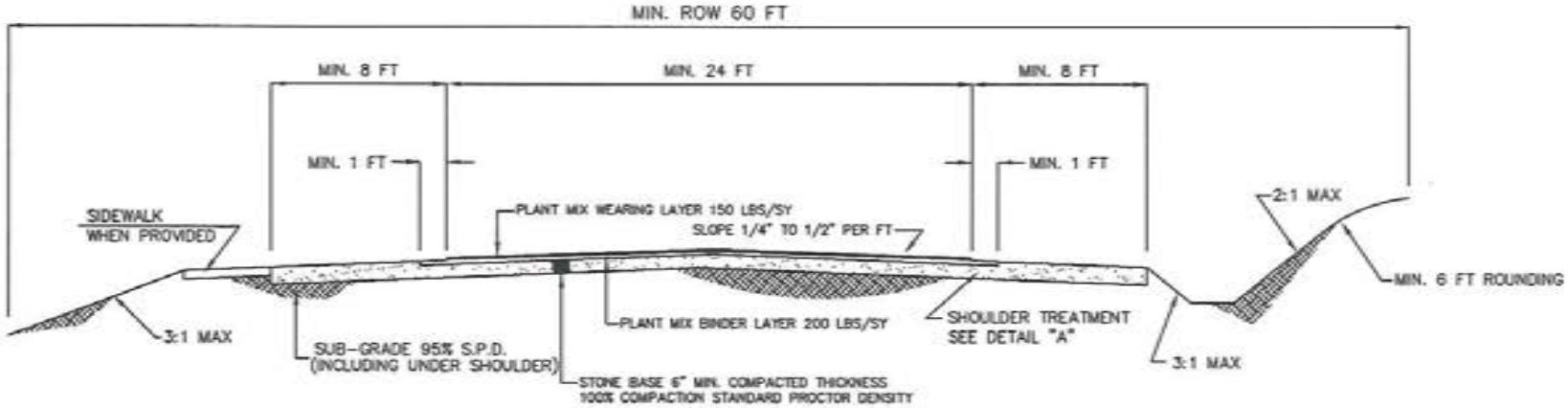

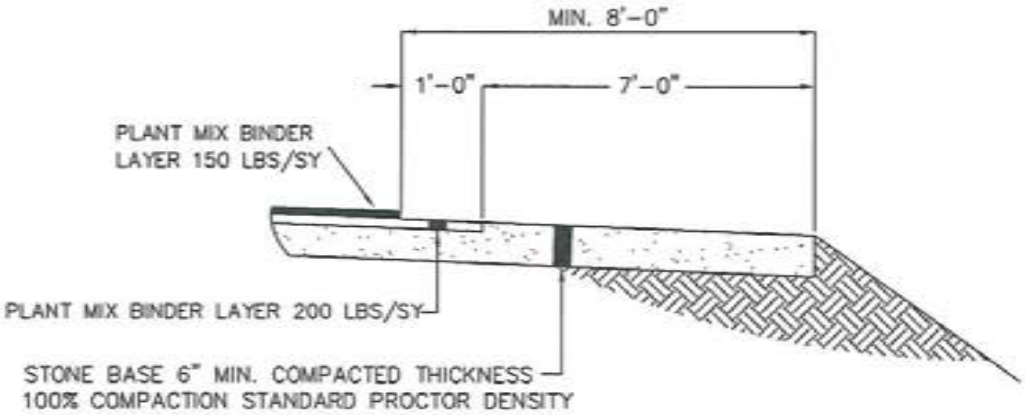

DETAIL "A"

TYPICAL ROADWAY & SHOULDER BUILDUP TREATMENT
FOR ROADS WITHOUT CURB & GUTTER

NOTES:

* THE ABOVE SLOPES ARE MAXIMUM SLOPES BOTH CUT AND FILL SLOPES WILL DEPEND ON THE STABILITY OF LOCAL SOILS AND ITS RESISTANCE TO EROSION IF TERRAIN AND WIDTH OF RIGHT OF WAY WILL PERMIT, FLATTER SLOPES ARE PREFERRED. ALL SLOPES SHALL CONFORM TO AASHTO STANDARDS.
* CLAY GRAVEL BASE MAY BE USED IN LEIU OF STONE STONE BASE PROVIDED IT MEETS THE REQUIREMENTS OF SECTION 5-4-10.
* SUPERELEVATION SHALL BE IN ACCORDANCE WITH AASHTO STANDARDS.

TYPICAL STREET SECTION

(WITH VALLEY GUTTER)
(NORMAL CROWN)

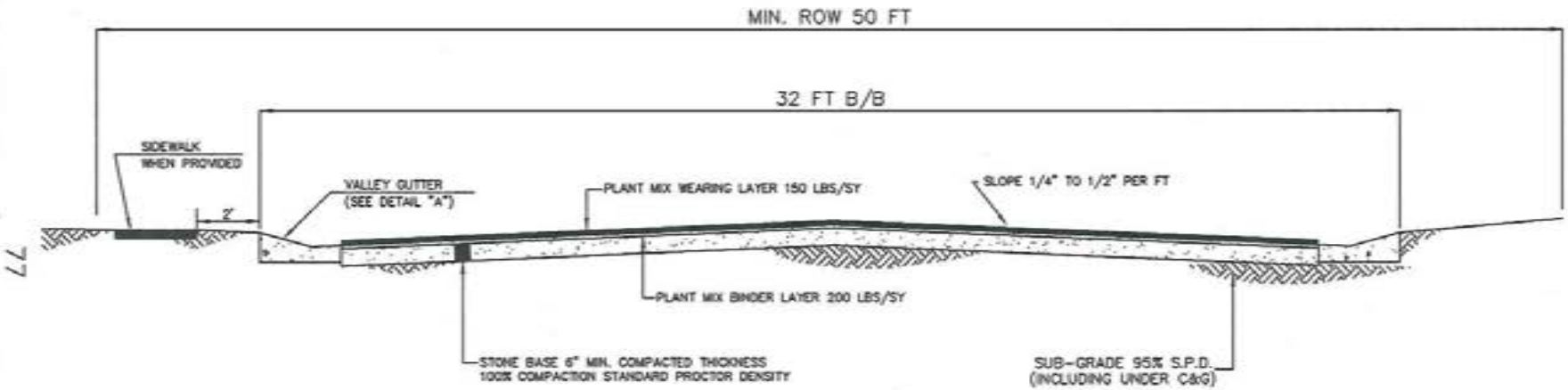

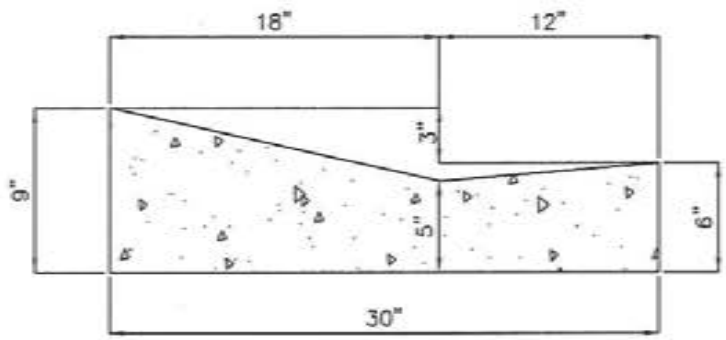

DETAIL "A"

TYPICAL VALLEY GUTTER

NOTES:

* THE ABOVE SLOPES ARE MAXIMUM SLOPES BOTH CUT AND FILL SLOPES WILL DEPEND ON THE STABILITY OF LOCAL SOILS AND ITS RESISTANCE TO EROSION IF TERRAIN AND WIDTH OF RIGHT OF WAY WILL PERMIT, FLATTER SLOPES ARE PREFERRED. ALL SLOPES SHALL CONFORM TO AASHTO STANDARDS.
* CLAY GRAVEL BASE MAY BE USED IN LEIU OF STONE STONE BASE PROVIDED IT MEETS THE REQUIREMENTS OF SECTION 5-4-10.
* SUPERELEVATION SHALL BE IN ACCORDANCE WITH AASHTO STANDARDS.

TYPICAL STREET SECTION

(WITH VALLEY GUTTER)
(NORMAL CROWN)

PERMITTED ONLY IN NEIGHBORHOOD SUBDIVISIONS SECTION 5-4-23

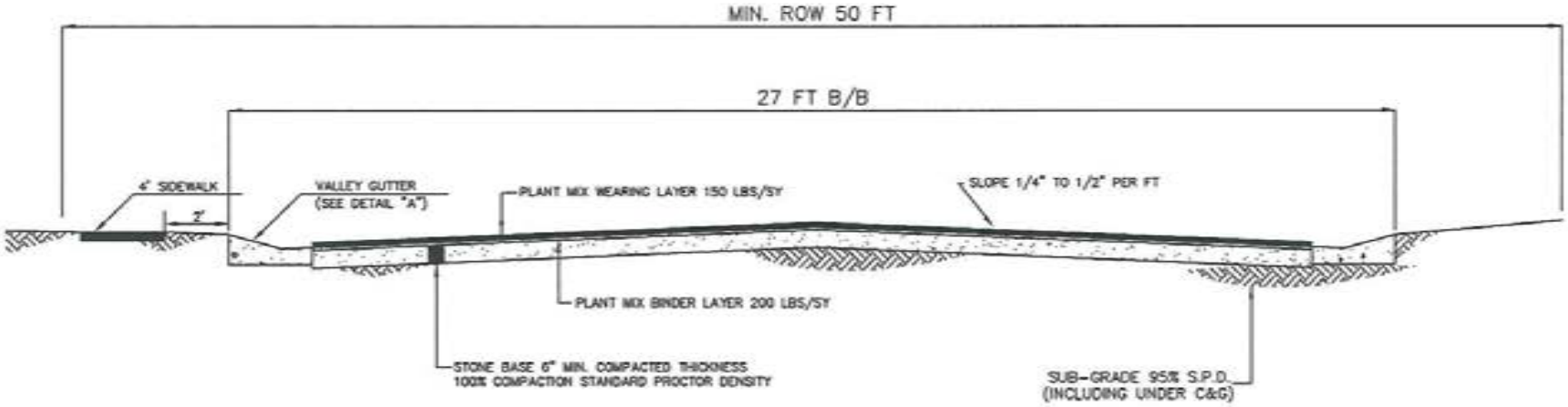

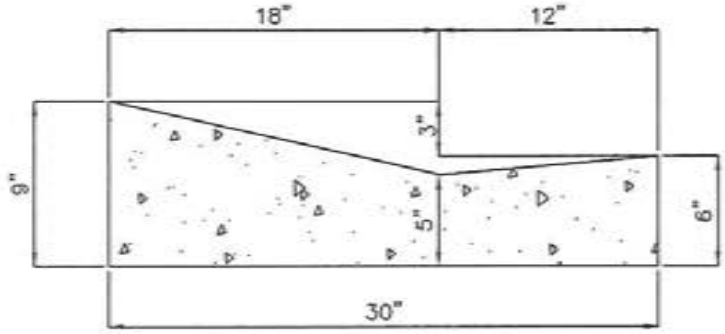

DETAIL "A"

TYPICAL VALLEY GUTTER

NOTES:

* THE ABOVE SLOPES ARE MAXIMUM SLOPES BOTH CUT AND FILL SLOPES WILL DEPEND ON THE STABILITY OF LOCAL SOILS AND ITS RESISTANCE TO EROSION IF TERRAIN AND WIDTH OF RIGHT OF WAY WILL PERMIT, FLATTER SLOPES ARE PREFERRED. ALL SLOPES SHALL CONFORM TO AASHTO STANDARDS.
* CLAY GRAVEL BASE MAY BE USED IN LEIU OF STONE STONE BASE PROVIDED IT MEETS THE REQUIREMENTS OF SECTION 5-4-10.
* SUPERELEVATION SHALL BE IN ACCORDANCE WITH AASHTO STANDARDS.

TYPICAL STREET SECTION

(WITH CURB AND GUTTER)
(NORMAL CROWN)

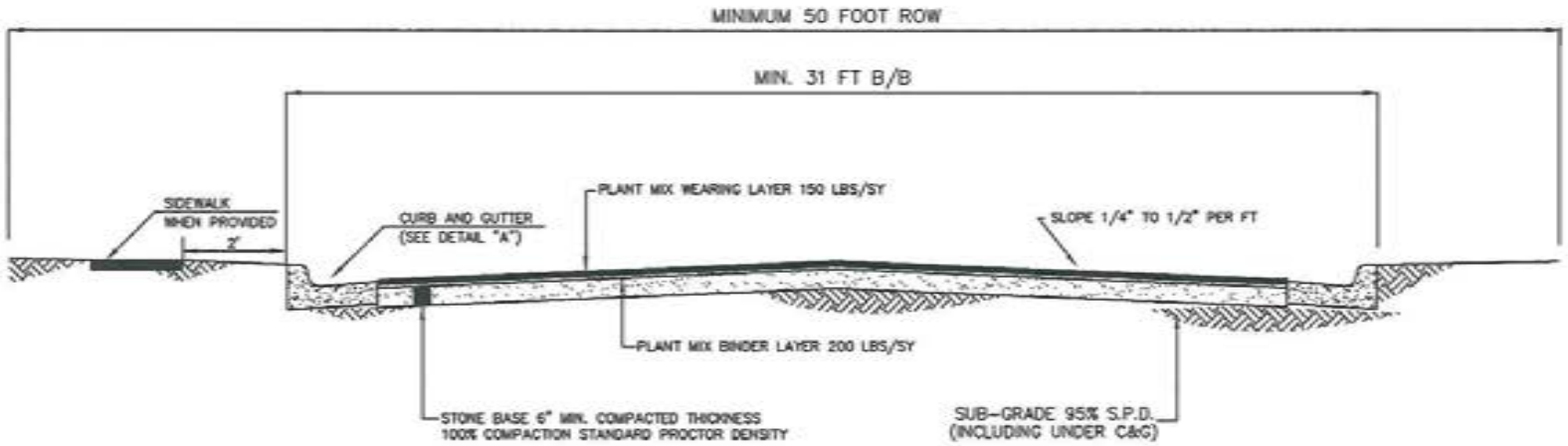

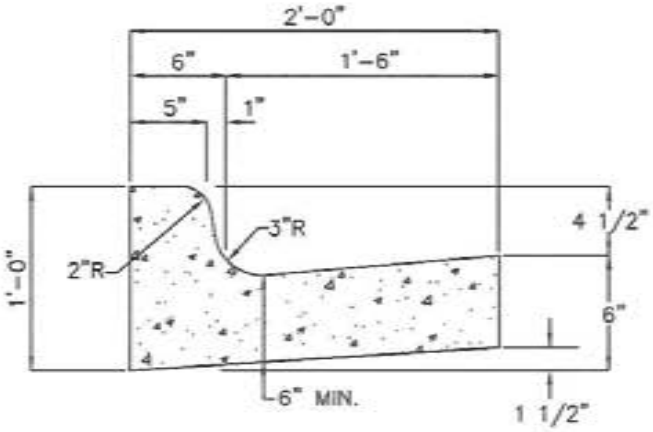

DETAIL "A"

TYPICAL COMBINATION CURB AND GUTTER

NOTES:

* THE ABOVE SLOPES ARE MAXIMUM SLOPES BOTH CUT AND FILL SLOPES WILL DEPEND ON THE STABILITY OF LOCAL SOILS AND ITS RESISTANCE TO EROSION IF TERRAIN AND WIDTH OF RIGHT OF WAY WILL PERMIT, FLATTER SLOPES ARE PREFERRED. ALL SLOPES SHALL CONFORM TO AASHTO STANDARDS.
* CLAY GRAVEL BASE MAY BE USED IN LEIU OF STONE STONE BASE PROVIDED IT MEETS THE REQUIREMENTS OF SECTION 5-4-10.
* SUPERELEVATION SHALL BE IN ACCORDANCE WITH AASHTO STANDARDS.

TYPICAL STREET SECTION

(WITHOUT CURB AND GUTTER)
(NORMAL CROWN)

PERMITTED ONLY IN SUBDIVISIONS WHERE LOT SIZE IS GREATER THAN 1 ACRE

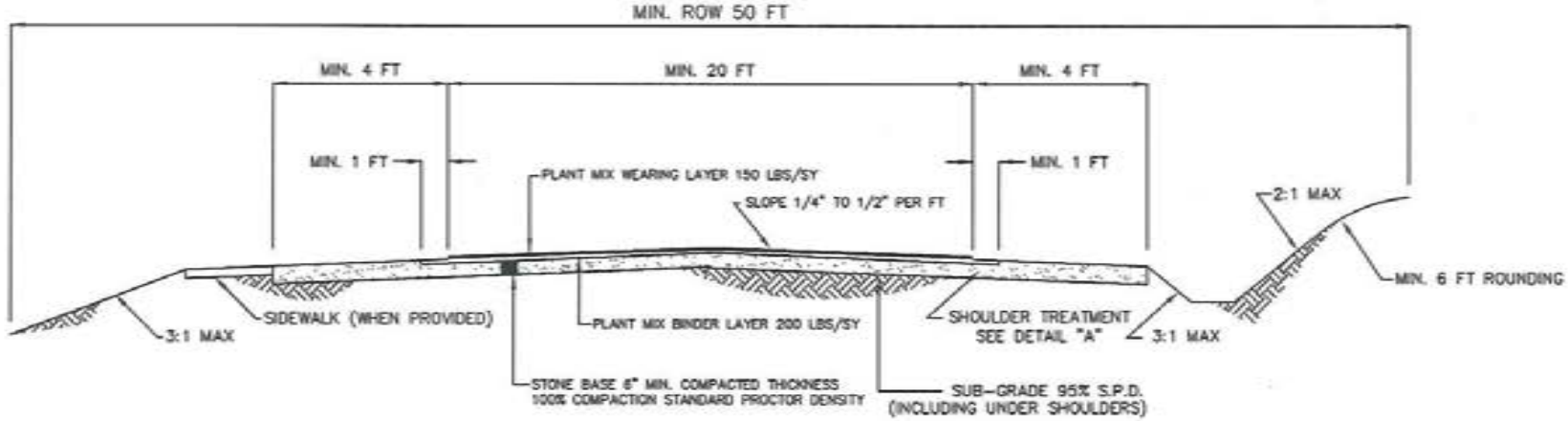

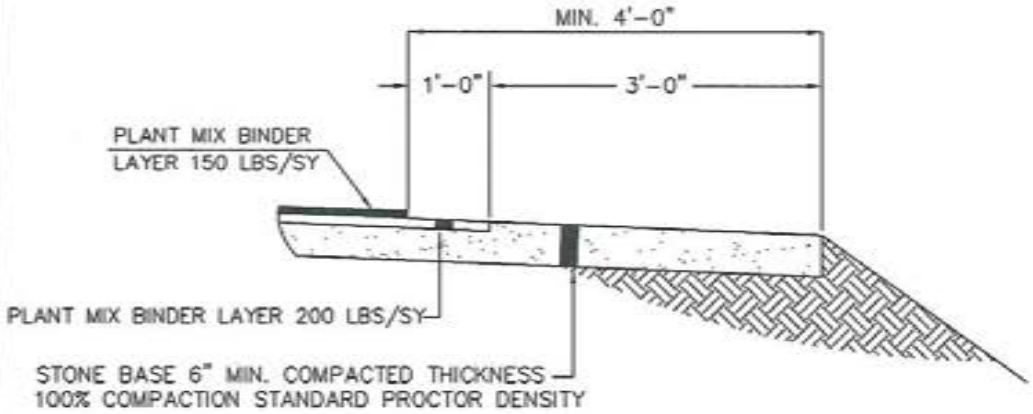

DETAIL "A"

TYPICAL SHOULDER TREATMENT
WITHOUT CURB AND GUTTER

NOTES:

* THE ABOVE SLOPES ARE MAXIMUM SLOPES BOTH CUT AND FILL SLOPES WILL DEPEND ON THE STABILITY OF LOCAL SOILS AND ITS RESISTANCE TO EROSION IF TERRAIN AND WIDTH OF RIGHT OF WAY WILL PERMIT, FLATTER SLOPES ARE PREFERRED. ALL SLOPES SHALL CONFORM TO AASHTO STANDARDS.
* CLAY GRAVEL BASE MAY BE USED IN LEIU OF STONE STONE BASE PROVIDED IT MEETS THE REQUIREMENTS OF SECTION 5-4-10.
* SUPERELEVATION SHALL BE IN ACCORDANCE WITH AASHTO STANDARDS.

APPENDIX XIV

FAMILY SUBDIVISION FORM

Prepared by: _____

Source of Title: Deed Book: _____ Page: _____

STATE OF ALABAMA }

TUSCALOOSA COUNTY }

We the undersigned, certify that the conveyance of property from _____ to _____ as recorded in Deed Book_____ at Page_____ is between immediate family members for bona fide personal use, and not for the purpose of resale or other development. We further certify that we understand that if at any time in the further this property is sold to any person outside the immediate family, all applicable subdivision regulations imposed by the Tuscaloosa County Commission will have to be met.

_____ _____

Grantor Date

_____ _____

Grantee Date

SATE OF ALABAMA }
TUSCALOOSA COUNTY }

I, the undersigned authority, a Notary Public in and for said County and State, hereby certify that_____, whose name is signed to the foregoing instrument, and who is known to me, acknowledged before me on this day, being informed of the contents of the instrument, that he/she executed the same voluntarily on the day the same bears date.

Give under my hand and official seal on this the _____ day of_____, 20__.

My Commission Expires:

_____

_____
Notary Public in and for the
State of Alabama at Large

APPENDIX XV

MARCH 13, 2013 RESOLUTION APPROVING THE REVISIONS TO THE TUSCALOOSA COUNTY SUBDIVISION REGULATIONS

STATE OF ALBAMA §

COUNTY OF TUSCALOOSA §

RESOLUTION OF THE TUSCALOOSA COUNTY COMMISSION APPROVING REVISIONS TO THE TUSCALOOSA COUNTY SUBDIVISION REGULATIONS

WHEREAS, the Section 11-24-1, et seq., of the Code of Alabama (1975), authorizes the County Commission to establish procedures and standards for the design and development of subdivisions, or additions to existing subdivisions, within the subdivision jurisdiction of Tuscaloosa County; and

WHEREAS, the County Commission previously adopted and amended the Tuscaloosa County Subdivision Regulations to address changing circumstances in the County; and

WHEREAS, Tuscaloosa County Commission determines that it is wise, expedient and necessary to revise the existing subdivision regulations; and

WHEREAS, the County Engineer has provided the Commission with suggested revisions to the subdivision regulations.

NOW, THEREFORE, BE IT RESOLVED by the Tuscaloosa County Commission, that the Tuscaloosa County Subdivision Regulations are hereby revised and that the County Commission affirmatively approves and adopts the 2013 version as the official subdivision regulations for Tuscaloosa County.

IN WITNESS WHEREOF, the Tuscaloosa County Commission has caused this Resolution to be executed in its name and on its behalf by its Chairman on this the 13th day of March, 2013.

W. Hardy McCollum, Chairman
Tuscaloosa County Commission

ATTEST:

M. L. Vines

Melvin Vines, County Administrator

STATE OF ALBAMA §

COUNTY OF TUSCALOOSA §

RESOLUTION OF THE TUSCALOOSA COUNTY COMMISSION APPROVING REVISIONS TO THE TUSCALOOSA COUNTY SUBDIVISION REGULATIONS

WHEREAS, the Section 11-24-1, et seq., of the Code of Alabama (1975), authorizes the County Commission to establish procedures and standards for the design and development of subdivisions, or additions to existing subdivisions, within the subdivision jurisdiction of Tuscaloosa County; and

WHEREAS, the County Commission previously adopted and amended the Tuscaloosa County Subdivision Regulations to address changing circumstances in the County; and

WHEREAS, Tuscaloosa County Commission determines that it is wise, expedient and necessary to revise the existing subdivision regulations; and

WHEREAS, the County Engineer has provided the Commission with suggested revisions to the subdivision regulations.

NOW, THEREFORE, BE IT RESOLVED by the Tuscaloosa County Commission, that the Tuscaloosa County Subdivision Regulations are hereby revised and that the County Commission affirmatively approves and adopts the 2013 version as the official subdivision regulations for Tuscaloosa County.

IN WITNESS WHEREOF, the Tuscaloosa County Commission has caused this Resolution to be executed in its name and on its behalf by its Chairman on this the 13th day of March, 2013.

W. Hardy McCollum, Chairman
Tuscaloosa County Commission

ATTEST:

Melvin Vines, County Administrator

STATE OF ALBAMA §

COUNTY OF TUSCALOOSA §

RESOLUTION OF THE TUSCALOOSA COUNTY COMMISSION APPROVING REVISIONS TO THE TUSCALOOSA COUNTY SUBDIVISION REGULATIONS

WHEREAS, the Section 11-24-1, et seq., of the Code of Alabama (1975), authorizes the County Commission to establish procedures and standards for the design and development of subdivisions, or additions to existing subdivisions, within the subdivision jurisdiction of Tuscaloosa County; and

WHEREAS, the County Commission previously adopted and amended the Tuscaloosa County Subdivision Regulations to address changing circumstances in the County; and

WHEREAS, Tuscaloosa County Commission determines that it is wise, expedient and necessary to revise the existing subdivision regulations; and

WHEREAS, the County Engineer has provided the Commission with suggested revisions to the subdivision regulations.

NOW, THEREFORE, BE IT RESOLVED by the Tuscaloosa County Commission, that the Tuscaloosa County Subdivision Regulations are hereby revised and that the County Commission affirmatively approves and adopts the 2013 version as the official subdivision regulations for Tuscaloosa County.

IN WITNESS WHEREOF, the Tuscaloosa County Commission has caused this Resolution to be executed in its name and on its behalf by its Chairman on this the 13th day of March, 2013.

W. Hardy McCollum, Chairman
Tuscaloosa County Commission

ATTEST:

Melvin Vines, County Administrator